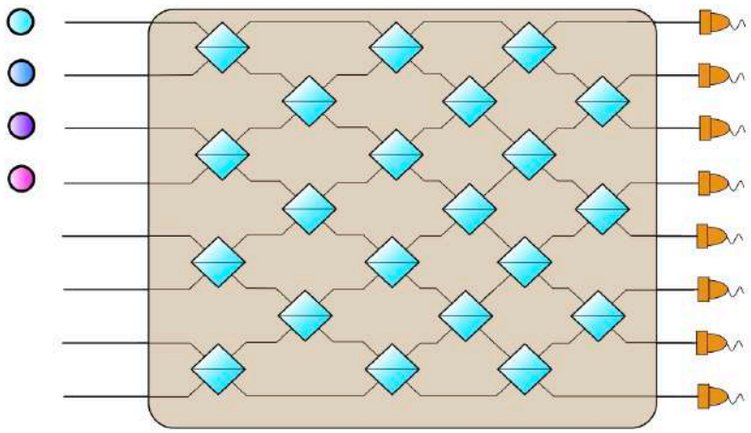

Photonic quantum computing

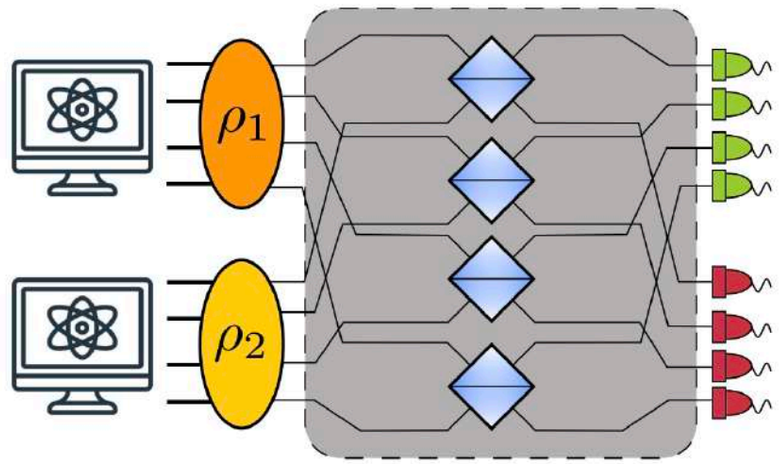

Short course - Nov. 23-25, 2026

Ernesto F. Galvão (UFF)

Instituto de Física
Universidade Federal Fluminense

Quantum information and computation group @IF-UFF

Faculty:

- Antonio Zelaquett Khoury
- Carlos Eduardo R. de Souza
- Daniel Jost Brod
- Daniel Jonathan
- Ernesto F. Galvão
- Fernando Iemini
- José Augusto Oliveira Huguenin
- Kaled Dechoum
- Mohammad Ali Rajabpour
- Reinaldo Faria de Melo e Souza
- Marcelo Sarandy
- Daniel Schneider Tasca
- Thiago Rodrigues de Oliveira
- Gabriel Bié



Research areas:

1- Quantum optics for quantum information
2- Foundations of quantum computation
3- Quantum information in condensed matter systems

For more information:

https://infoptics.wp.grupos.if.uff.br/

INSTITUTO DE FÍSICA
Universidade Federal Fluminense

Introduction to linear-optical quantum computation

Day	Topic
23/11 - Monday	Introduction Stabilizer formalism Measurement-based quantum computation (MBQC)
24/11 - Tuesday	Linear optics Multimode interferometers and boson sampling
25/11 - Wednesday	Scalable architectures for linear-optical quantum computation Simulation techniques

References: please check the course website for references and links to further material:

https://sites.google.com/id.uff.br/pqcictp/

Quantum computation with linear optics

Outline of 1st lecture:

- Physical platforms for quantum computation
- Computing with light: discrete variables (DV) vs continuous variables (CV)
- Pauli group, Clifford gates, and simulability
- Measurement-based quantum computation (MBQC)
- Entanglement resources for MBQC
- Applications

Quantum computation: current status

Theory:

- Scalable, error-corrected QCs will provide computational break-throughs in data security, optimization, materials science, q. chemistry, etc.

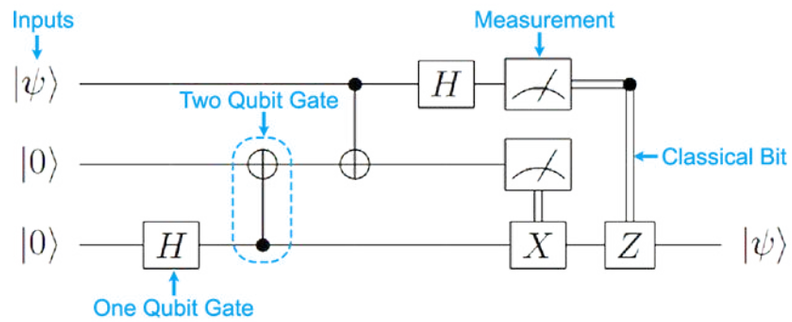

- Improvement over classical computers requires some structure – QCs are **not** just faster computers

- Open problem: can we obtain practical advantage with near-term Noisy, Intermediate-Scale Quantum (NISQ) devices?



Experiment:

- Small-scale QC prototypes using various physical platforms
- Demonstrations of computational advantage for contrived problems with no useful applications
- Still no practical advantage over classical computers
- Still a long way towards error-correction & large scale QC

Physical platforms for quantum computation

Ion Traps

Extremely good gates, up to 98 qubits

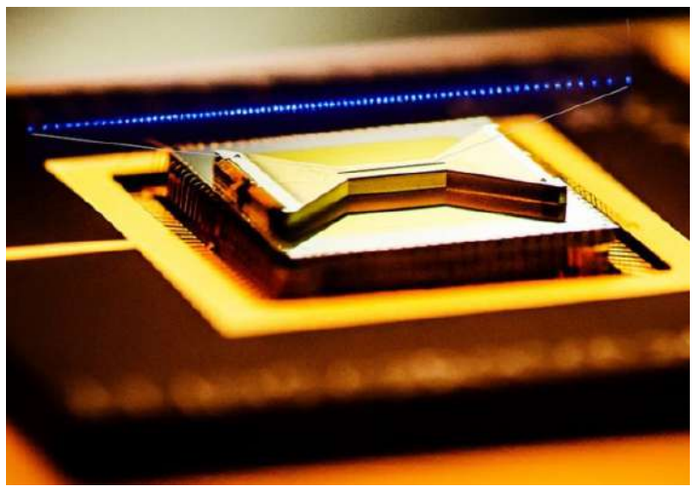

Montage: ion trap, trapped ions (IonQ)

Cold neutral atoms

Up to 6100 qubits, small demos of q. error correction

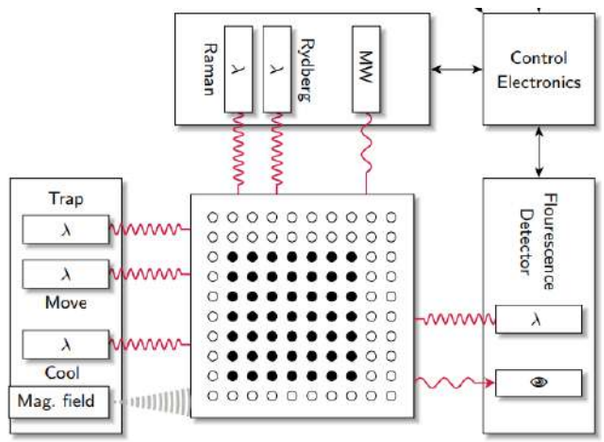

Wintersperger *et al.*, EPJ Q.Tech. 10, 32 (2023)

Superconducting chips

Up to 1121 (very noisy) qubits (IBM)

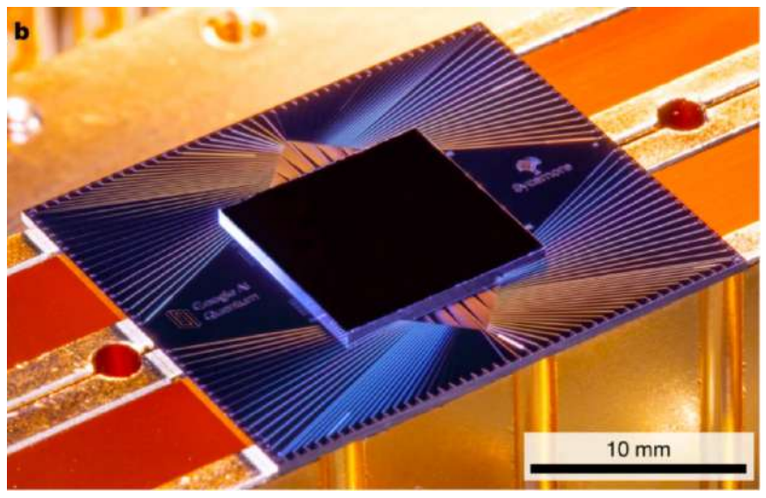

Image: Arute et al., Nature **574**, 505 (2019)

Electrons in solid state

Two-qubit gates demonstrated

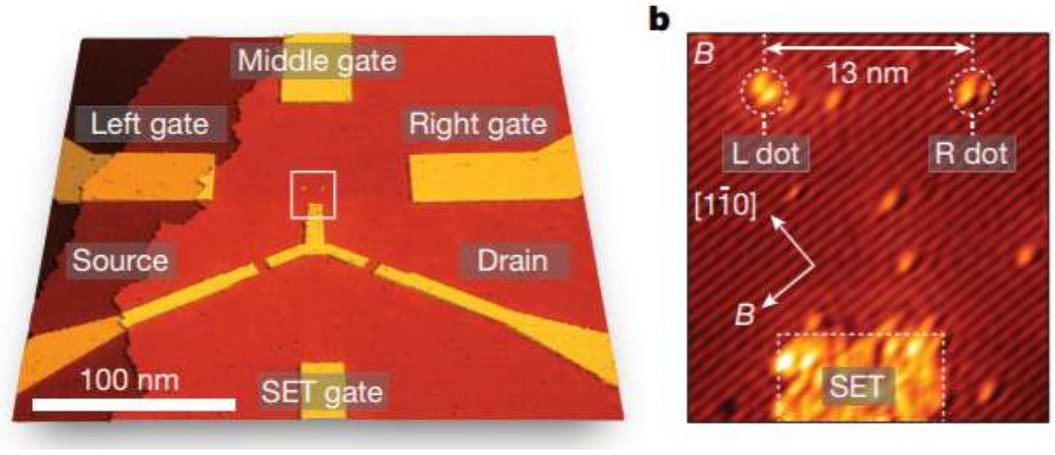

Y. He et al., Nature 571, 371 (2019)

Quantum computing with light

- Photonics is a very different platform!

- Some characteristics:

- No need for large-scale cryogenic refrigeration
- Near-perfect single-qubit gates – think e.g. polarization manipulation
- Measurement-induced probabilistic two-qubit gates – uses ideas from measurement-based quantum computation (MBQC)

Quantum circuits

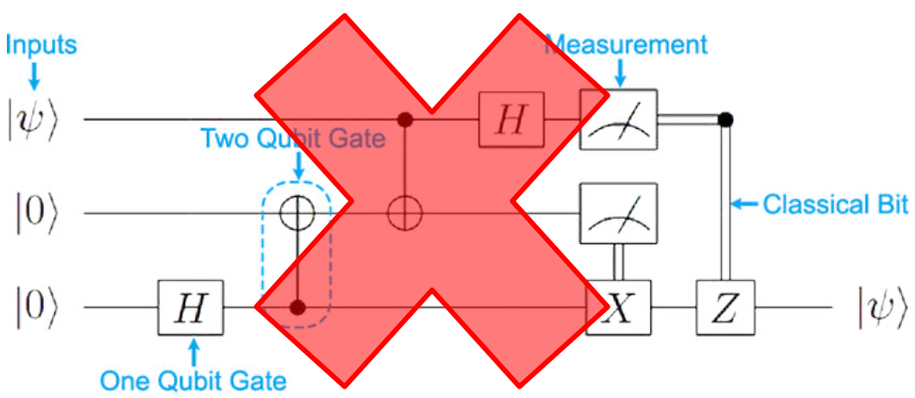

Measurement-based quantum computation

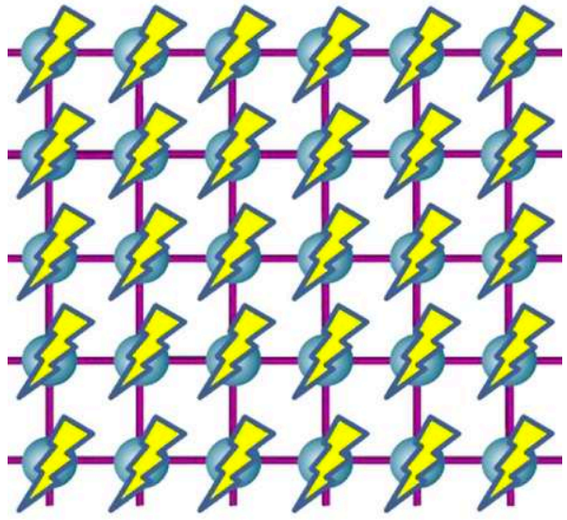

1- Initialization by CZ gates on $|+\rangle$ states;
2- Sequence of single-qubit, adaptive measurements.

Quantum computing with light

Quantum computing with light – continuous variables (CV)

- CV photonic quantum computation uses continuous degrees of freedom of light for information encoding and processing, e.g. quadratures x, p of the electric field
- We can picture states in phase space, using e.g. Wigner function
- Available operations:
  - Passive linear optics - beam splitters and phase shifters - preserve photon number
  - Active linear optics - quadrature squeezing from optical parametric oscillators (OPOs)- changes photon number
  - Homodyne and heterodyne measurements

- Passive + active LO = Gaussian operations which can be efficiently simulated

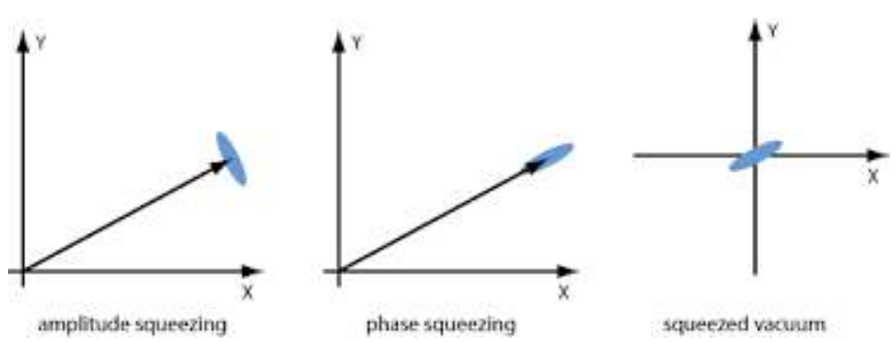

- We need to add some non-Gaussian resource state or operation for universal QC
  - Photon addition or subtraction
  - Photo-detection
  - Non-linear photonic gates

- We'll be briefly discussing CV photonic QC later in the course, but here we'll be mostly focusing on **discrete-variable photonic QC**

Quantum computing with light – discrete variables (DV)

Time-bin encoding

- presence/absence of photons in successive pulses used to encode quantum information
- delays and optical elements used to implement unitaries
- convenient for fiber optics

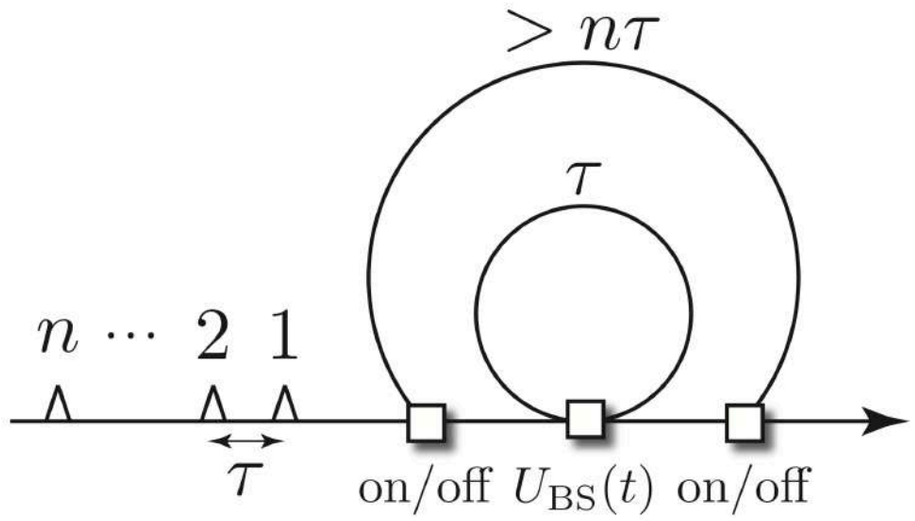

from: Motes et al., PRL 113, 120501 (2014)

Orbital angular momentum of light

Photon polarization

…

Quantum computing with light – discrete variables (DV)

Path encodings

Dual-rail: single photon in two propagation modes, labelled 0/1

- arbitrary single-photon gates easy – beam splitters (BS) and phase shifters:

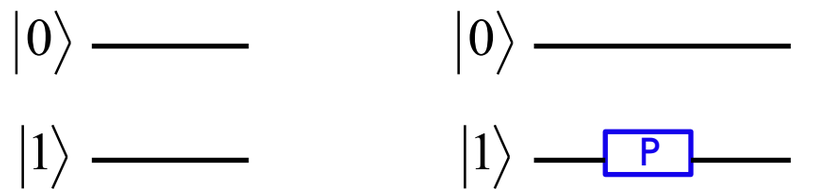

$$R(\varphi) = \begin{pmatrix} 1 & 0 \\ 0 & e^{i\varphi} \end{pmatrix} \qquad U(\theta) = \begin{pmatrix} \cos(\theta) & i\sin(\theta) \\ i\sin(\theta) & \cos(\theta) \end{pmatrix}$$

- Arbitrary single-qubit unitaries implementable with a BS and phase shifters

- The problem are entangling two-qubit unitaries – how to make the two photons interact?

  - One way: medium with large cross-Kerr non-linearity (hard to do)
  - Measurement-induced non-linearities:
    key idea of **Knill-Laflamme-Milburn (KLM)** proposal

- The most promising current approaches to photonic QC uses **measurement-based quantum computation** (MBQC) ideas which we'll review next.

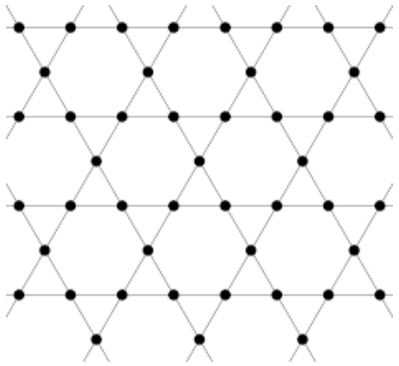

Introduction to the stabilizer formalism and measurement-based quantum computation (MBQC)

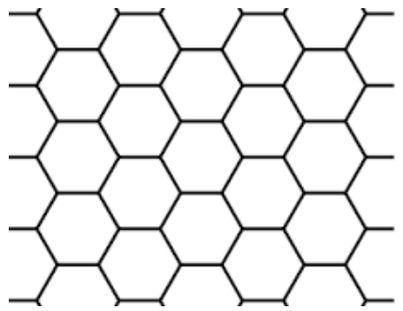

Ernesto F. Galvão (UFF)

Instituto de Física
Universidade Federal Fluminense

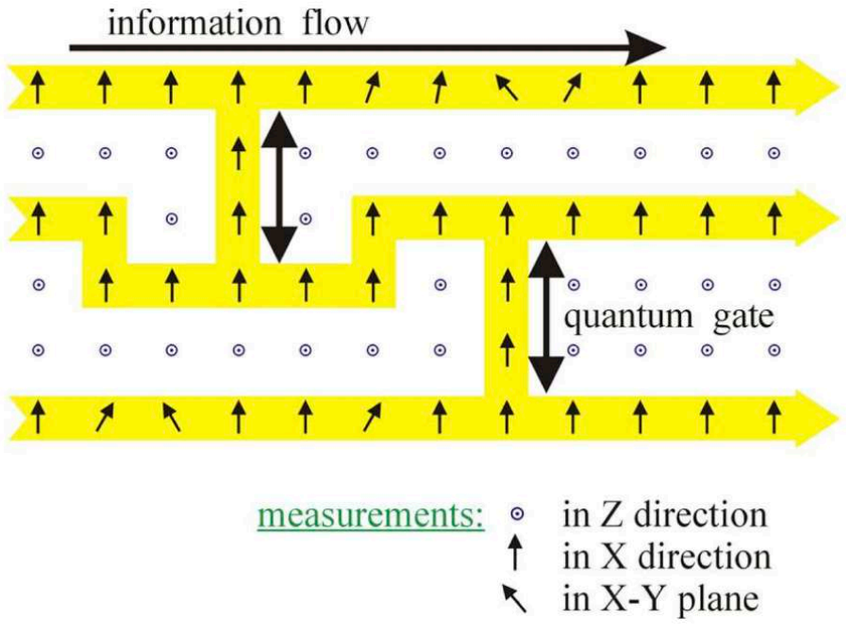

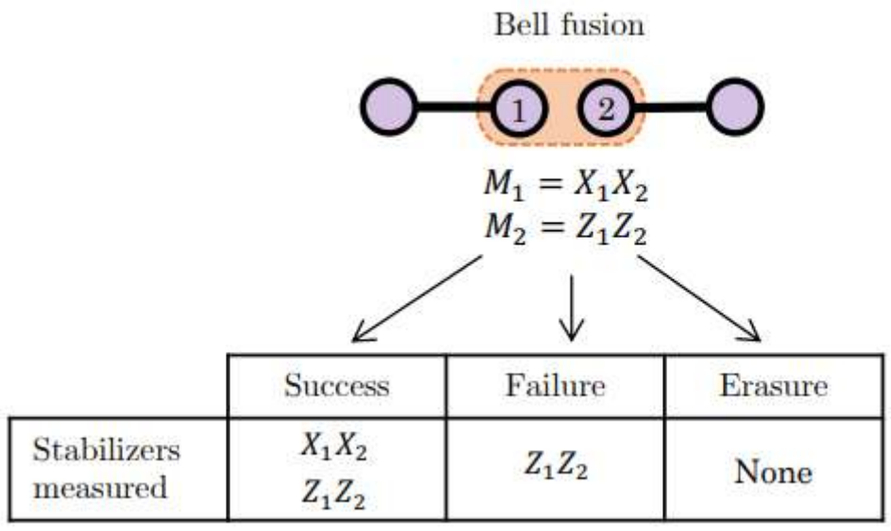

	Success	Failure	Erasure
Stabilizers measured	X_1X_2 Z_1Z_2	Z_1Z_2	None

3rd Quantum Computing School - ICTP-SAIFR - IFT-UNESP, Nov. 23-25, 2026

Stabilizer formalism, and intro to MBQC

Outline:

- Clifford circuits
  - Pauli and Clifford groups
  - Simulability of Clifford circuits
  - Upgrading Clifford circuits to universal QC
- How MBQC works
  - One-bit teleportation circuit
  - Gate teleportation
  - Concatenating MBQC gates
- Resources for MBQC: graph and cluster states
- Growing graph states

Clifford circuits

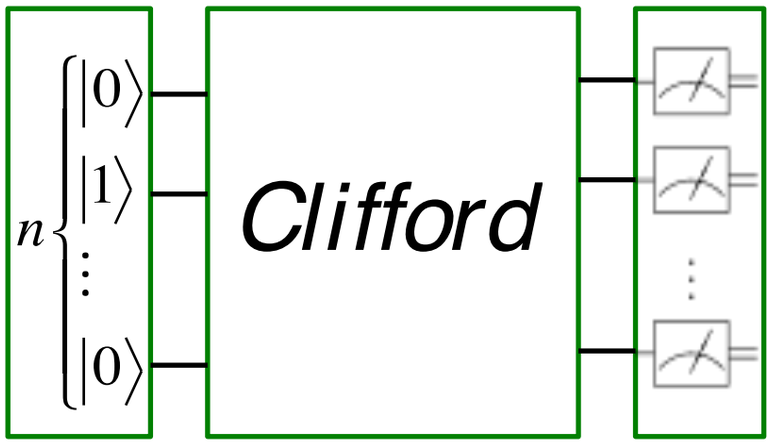

$$|A\rangle = \frac{1}{\sqrt{2}}\left(|0\rangle + e^{j\pi/4}|1\rangle\right)$$

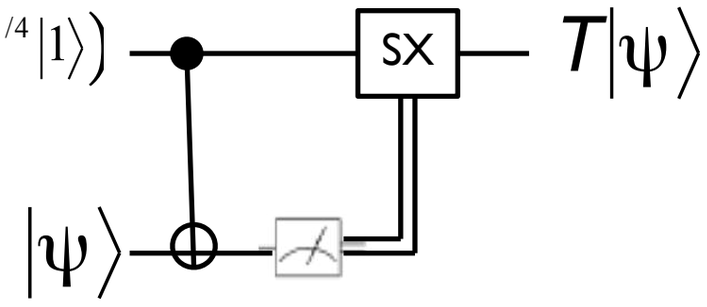

Basics of the circuit model

- The most well-known model for quantum computation is the circuit model, obtained in analogy with classical circuits

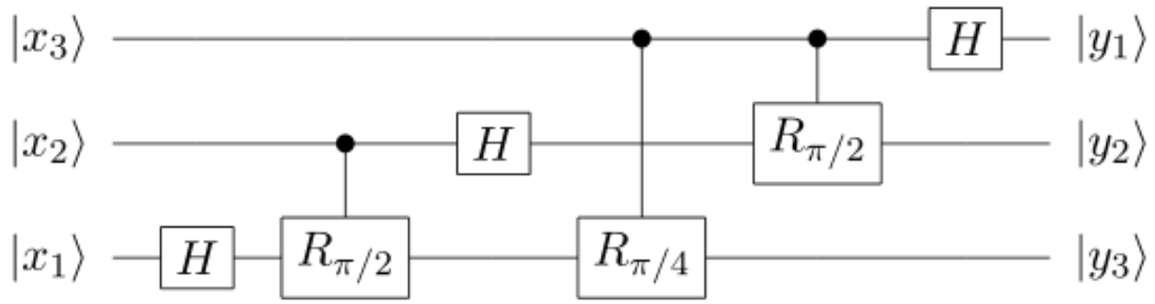

3-qubit QFT

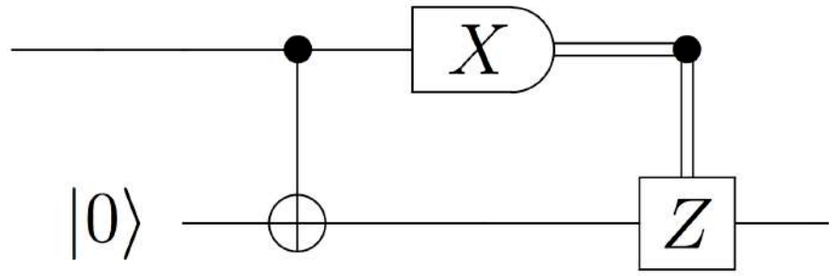

1-bit Z teleportation

- wires = qubits (i.e. 2-level systems)
- little boxes = single-qubit gates

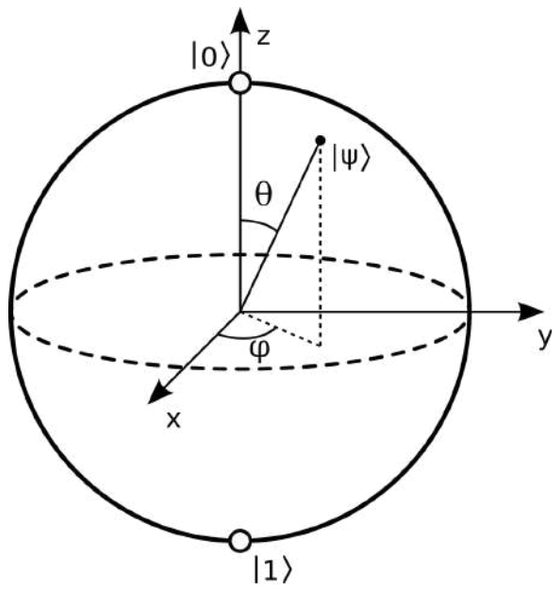

$$|\psi\rangle = \cos(\theta/2)|0\rangle + e^{i\phi}\sin(\theta/2)|1\rangle$$

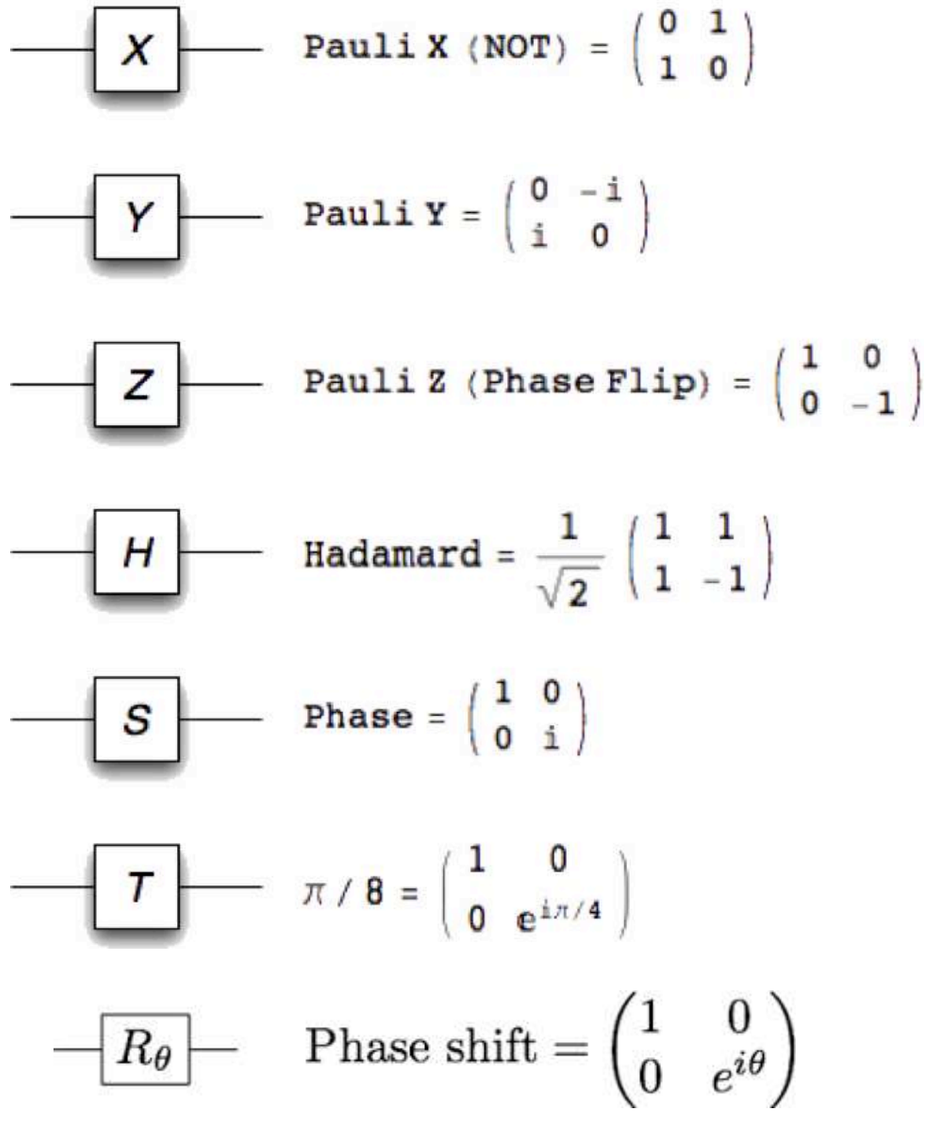

Clifford circuits

- **Pauli group**: tensor products of $\pm I, \pm iI, X, Z$

- example: $-iZ_1 \otimes X_2 \otimes I_3$

Clifford circuits

- **Pauli group**: tensor products of $\pm I, \pm iI, X, Z$

- example: $-iZ_1 \otimes X_2 \otimes I_3$

- **Clifford group**: unitaries C that map Paulis into Paulis:

$$CP_iC^+ = P_j \Leftrightarrow CP_i = P_jC$$

- Clifford group is generated by $\{H, P, CNOT\}$

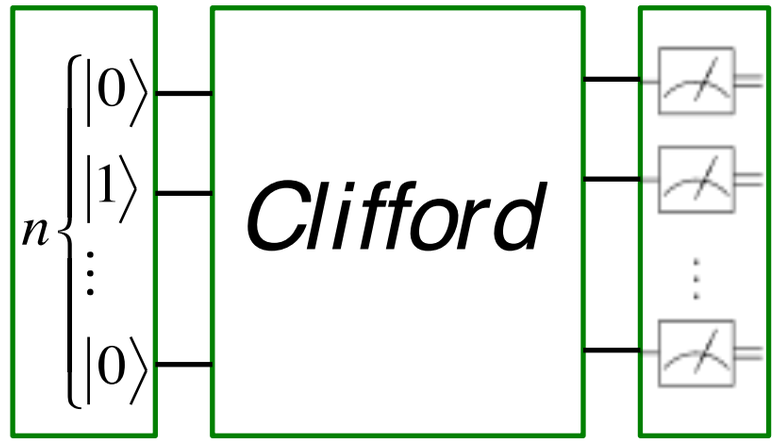

- Clifford circuits create large amounts of entanglement, are useful for teleportation, error correction…

…but are **efficiently simulable**.

Clifford circuits

- **Pauli group**: tensor products of $\pm I, \pm iI, X, Z$
- **Clifford group**: unitaries C that map Paulis into Paulis:

$$CP_iC^+ = P_j \Leftrightarrow CP_i = P_jC$$

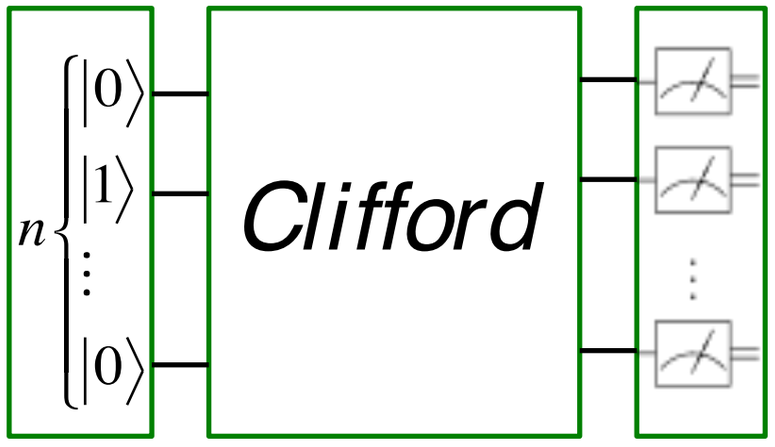

H	$X \to Z$ $Z \to X$	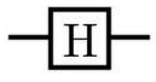
P	$X \to Y$ $Z \to Z$	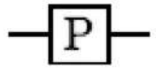
CNOT	$X \otimes I \to X \otimes X$ $I \otimes X \to I \otimes X$ $Z \otimes I \to Z \otimes I$ $I \otimes Z \to Z \otimes Z$	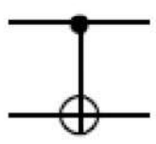

- The key simulation idea is to use Heisenberg picture:
  - initial state is eigenstate of Pauli operator
  - each Clifford gate maps it into a new Pauli (efficient computation)
  - keep track of the Pauli transformation until end, when measurement outcomes can be efficiently computed.

- Clifford circuits are not believed even to be able to do universal classical computation…

Example: Heisenberg simulation of Clifford circuit

H	$X \to Z$ $Z \to X$	
P	$X \to Y$ $Z \to Z$	
CNOT	$X \otimes I \to X \otimes X$ $I \otimes X \to I \otimes X$ $Z \otimes I \to Z \otimes I$ $I \otimes Z \to Z \otimes Z$	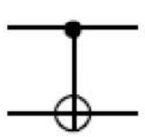

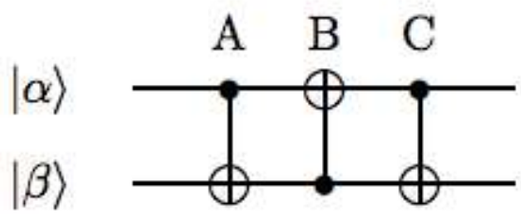

b)

A: CNOT$(1 \to 2)$	$\overline{X}_1$	$X \otimes X$
	$\overline{X}_2$	$I \otimes X$
	$\overline{Z}_1$	$Z \otimes I$
	$\overline{Z}_2$	$Z \otimes Z$
B: CNOT$(2 \to 1)$	$\overline{X}_1$	$I \otimes X$
	$\overline{X}_2$	$X \otimes X$
	$\overline{Z}_1$	$Z \otimes Z$
	$\overline{Z}_2$	$Z \otimes I$
C: CNOT$(1 \to 2)$	$\overline{X}_1$	$I \otimes X$
	$\overline{X}_2$	$X \otimes I$
	$\overline{Z}_1$	$I \otimes Z$
	$\overline{Z}_2$	$Z \otimes I$

- The key simulation idea is to use Heisenberg picture:
  - initial state is eigenstate of Pauli operator
  - each Clifford gate maps it into a new Pauli (efficient computation)
  - keep track of the Pauli transformation until end, when measurement outcomes can be efficiently computed.

- Describing how to compute the probabilities of single-qubit Pauli measurements is a bit involved, see Nielsen and Chuang, section 10.5. The probabilities can only be 0, 1, and ½, and can be efficiently calculated.

Example, exercise

H	$X \to Z$ $Z \to X$	
P	$X \to Y$ $Z \to Z$	
CNOT	$X \otimes I \to X \otimes X$ $I \otimes X \to I \otimes X$ $Z \otimes I \to Z \otimes I$ $I \otimes Z \to Z \otimes Z$	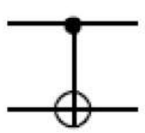

- Example: Bell state preparation/ measurement.

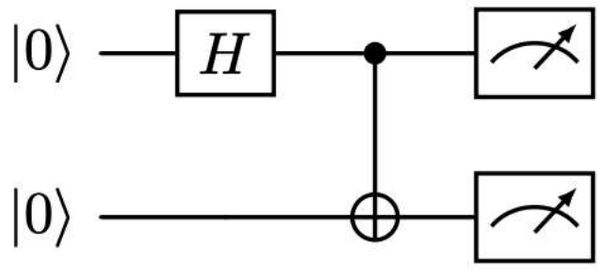

$$Z\mathbb{1} \xrightarrow{H} X\mathbb{1} \xrightarrow{\text{CNOT}_{1\to 2}} XX$$
$$\mathbb{1}Z \xrightarrow{H} \mathbb{1}Z \xrightarrow{\text{CNOT}_{1\to 2}} ZZ$$

- Bell states are common eigenstates of XX, ZZ:

$$|\psi_{00}\rangle = \tfrac{1}{\sqrt{2}}\big(\,|00\rangle + |11\rangle\,\big),$$
$$|\psi_{01}\rangle = \tfrac{1}{\sqrt{2}}\big(\,|00\rangle - |11\rangle\,\big),$$
$$|\psi_{10}\rangle = \tfrac{1}{\sqrt{2}}\big(\,|10\rangle + |01\rangle\,\big),$$
$$|\psi_{11}\rangle = \tfrac{1}{\sqrt{2}}\big(\,|01\rangle - |10\rangle\,\big).$$

- **Exercise 1**: use stabilizer formalism to find out what this circuit is equivalent to.

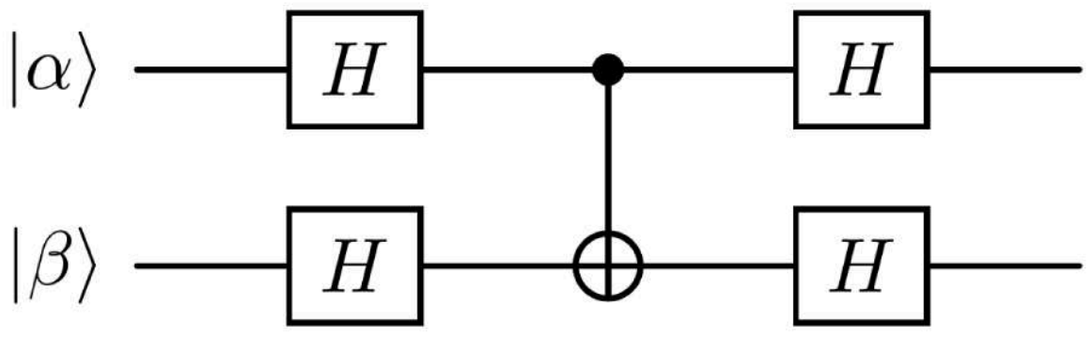

"Upgrading" a Clifford computer

- Clifford: $\{H, P, Z, CNOT\}$, all that's missing is *T* gate

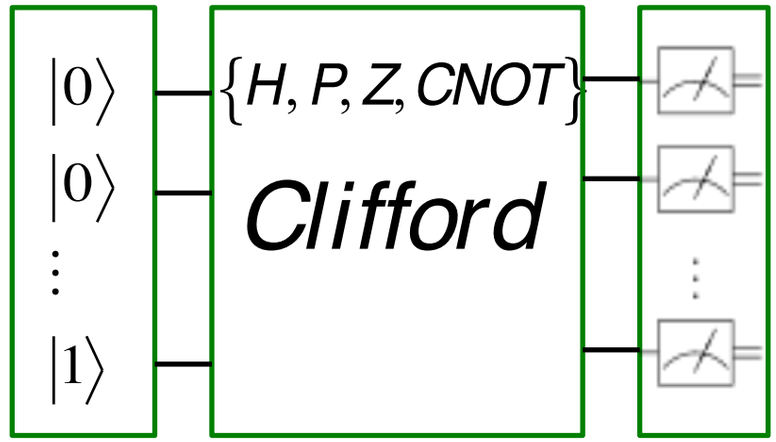

- There's a work-around using:
  - **magic input states** and
  - **adaptivity** [Bravyi, Kitaev PRA 71, 022136 (2005)]

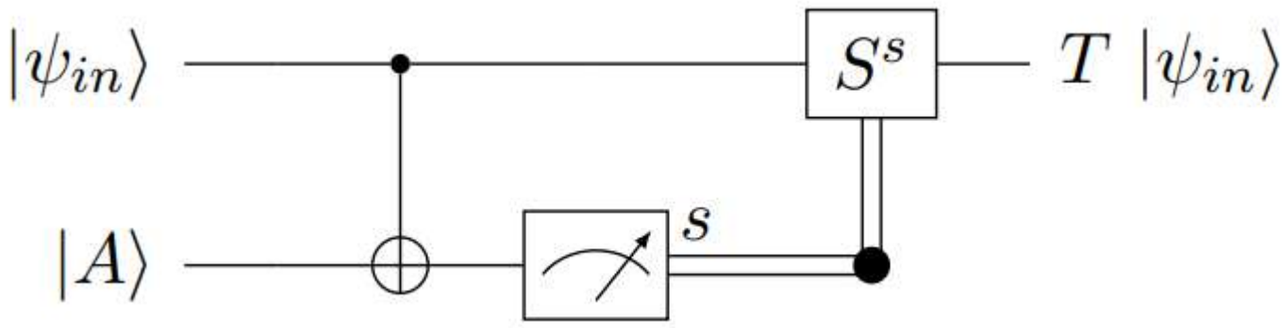

$$|A\rangle = \frac{1}{\sqrt{2}}\left(|0\rangle + e^{i\pi/4}|1\rangle\right)$$

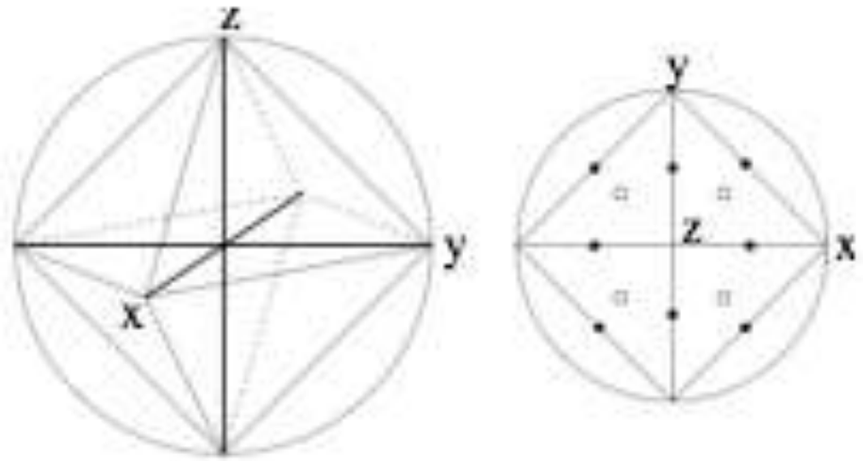

"Upgrading" a Clifford computer

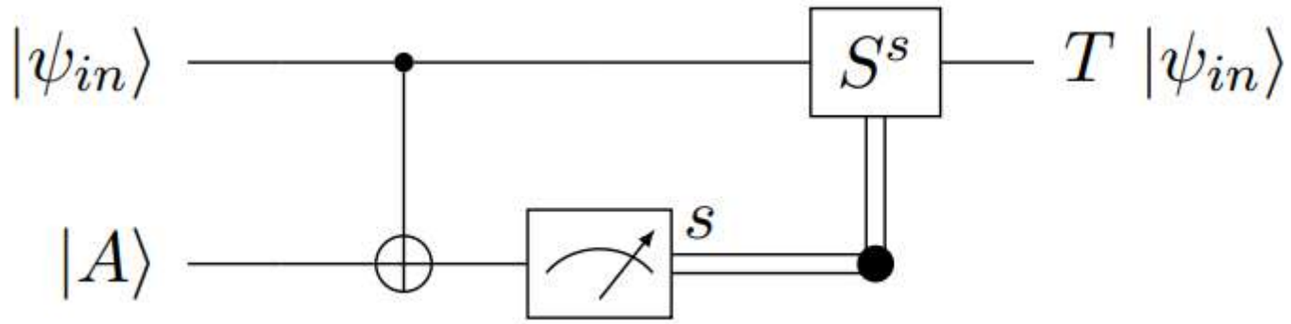

$$|A\rangle = \frac{1}{\sqrt{2}}\left(|0\rangle + e^{i\pi/4}|1\rangle\right)$$

- **Exercise 2**: prove the circuit above works as advertised. To think: can we implement smaller rotations around Z in this way?

$$|\psi_{in}\rangle = (\alpha|0\rangle + \beta|1\rangle) \otimes \frac{1}{\sqrt{2}}\left(|0\rangle + e^{i\frac{\pi}{4}}|1\rangle\right)$$

$$= \frac{1}{\sqrt{2}}\left[\alpha|00\rangle + \alpha e^{i\frac{\pi}{4}}|01\rangle + \beta|10\rangle + \beta e^{i\frac{\pi}{4}}|11\rangle\right]$$

$$\xrightarrow{\text{CNOT } 1\to 2} \frac{1}{\sqrt{2}}\left[\alpha|00\rangle + \alpha e^{i\frac{\pi}{4}}|01\rangle + \beta|11\rangle + \beta e^{i\frac{\pi}{4}}|10\rangle\right]$$

Measure qubit 2, outcome s.

If $s=0 \Rightarrow |\psi\rangle = \alpha|0\rangle + \beta e^{i\frac{\pi}{4}}|1\rangle = T|\psi_{in}\rangle$ NO correction needed.

If $s=1 \rightarrow |\psi\rangle = \alpha e^{i\frac{\pi}{4}}|0\rangle + \beta|1\rangle \xrightarrow{S} \alpha e^{i\frac{\pi}{4}}|0\rangle + \beta e^{i\frac{\pi}{2}}|1\rangle$

$\left(\cdot e^{-i\frac{\pi}{4}}\right)$ = Global phase

$= \alpha|0\rangle + \beta e^{i\frac{\pi}{4}}|1\rangle = T|\psi_{in}\rangle$

"Upgrading" a Clifford computer

- Clifford: $\{H, P, Z, CNOT\}$, all that's missing is *T* gate

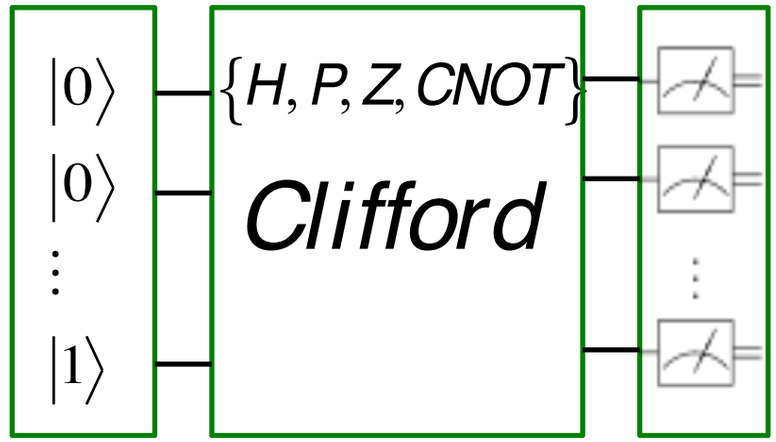

- There's a work-around using:
  - **magic input states** and
  - **adaptativity** [Bravyi, Kitaev PRA 71, 022136 (2005)]

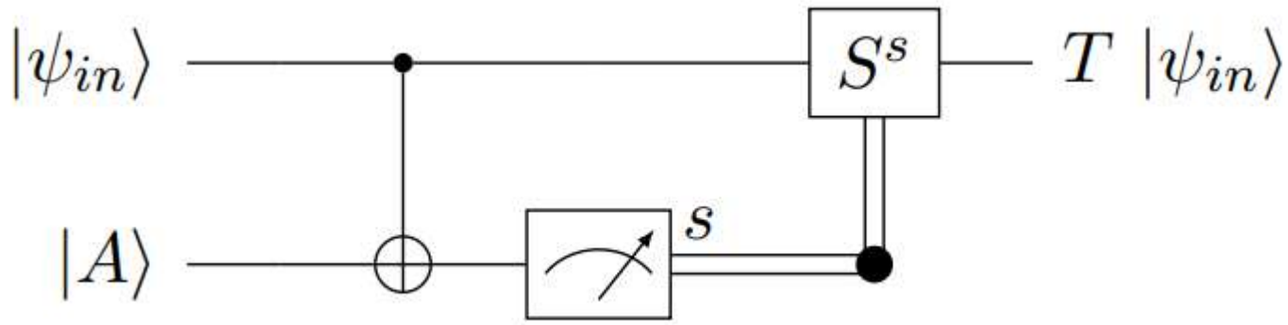

$$|A\rangle = \frac{1}{\sqrt{2}}\left(|0\rangle + e^{i\pi/4}|1\rangle\right)$$

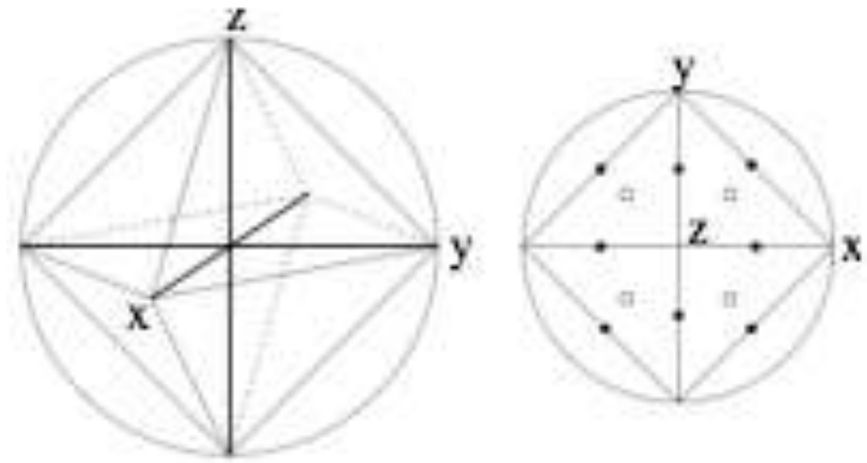

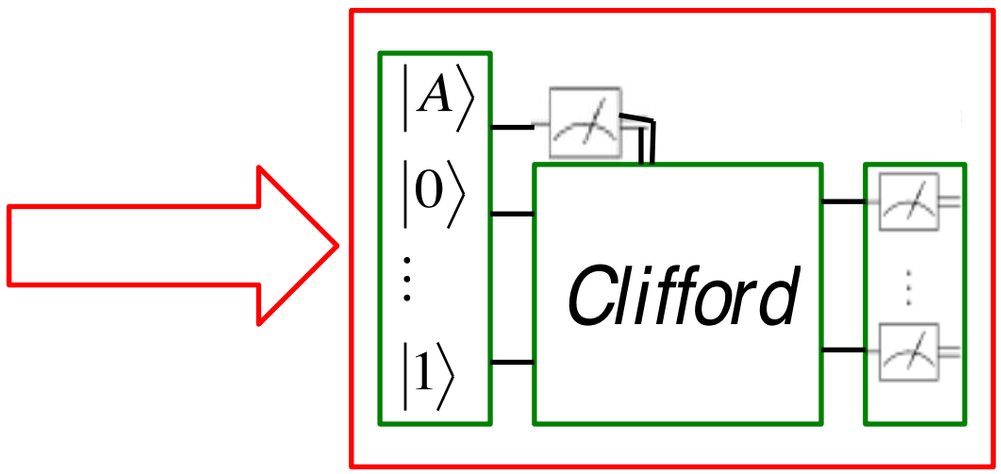

is universal for QC

Measurement-based quantum computation (MBQC)

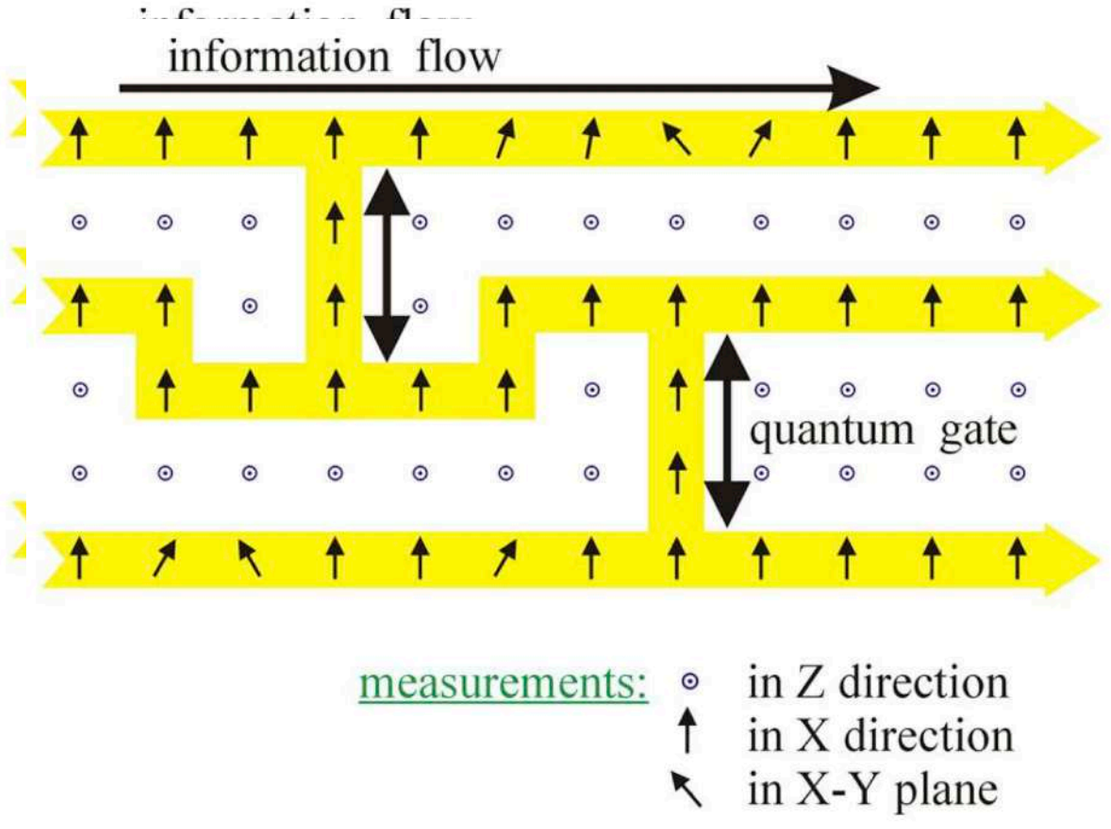

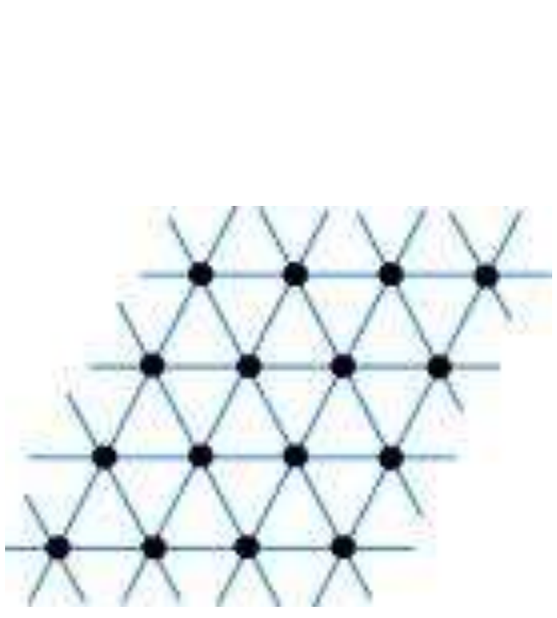

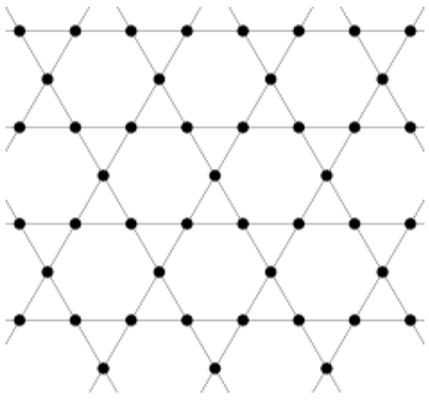

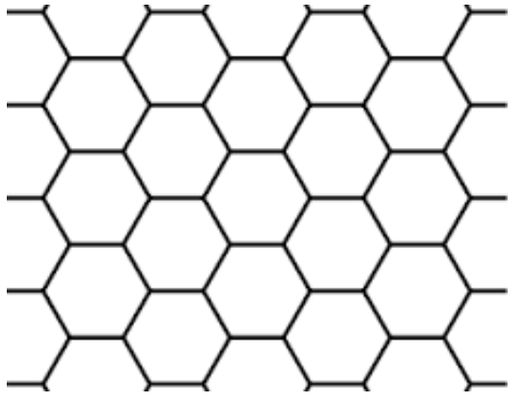

MBQC: basic ingredients

- Class of QC models where the computation is driven by measurements on previously entangled states

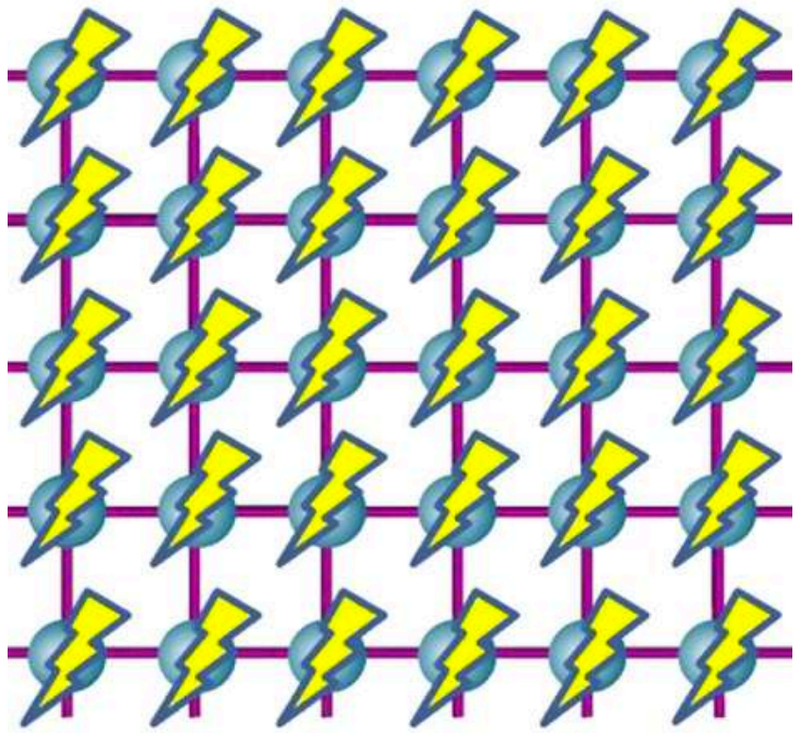

1- Initialization by CZ gates on $|+\rangle$ states;

2- Sequence of single-qubit, adaptive measurements.

- Origin: gate teleportation idea [Gottesman, Chuang, Nature 402, 390 (1999)]
- Most well-known variant is the one-way model (1WQC) [Raussendorf, Briegel PRL 86, 5188 (2001)]
- Brief introduction to MBQC based on McKague's paper "Interactive proofs for BQP via self-tested graph states" arxiv:1309.5675 (2013)

MBQC: step-by-step

3 versions of the "1-bit *Z* teleportation" circuit:

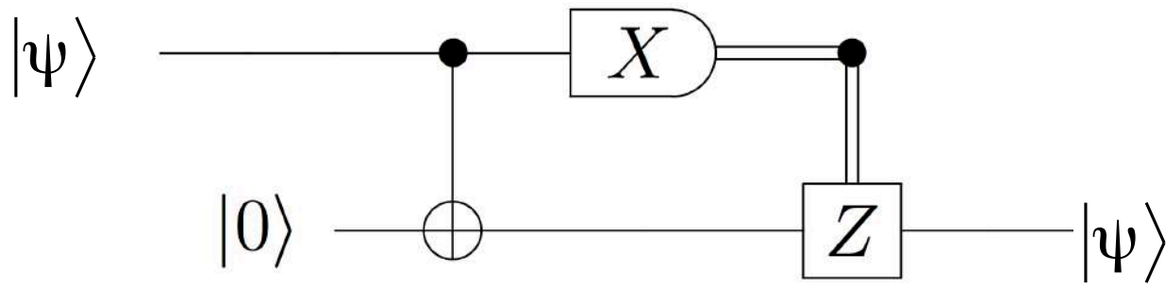

- X measurement result controls Z gate
- Direct calculation shows this works

MBQC: step-by-step

3 versions of the "1-bit *Z* teleportation" circuit:

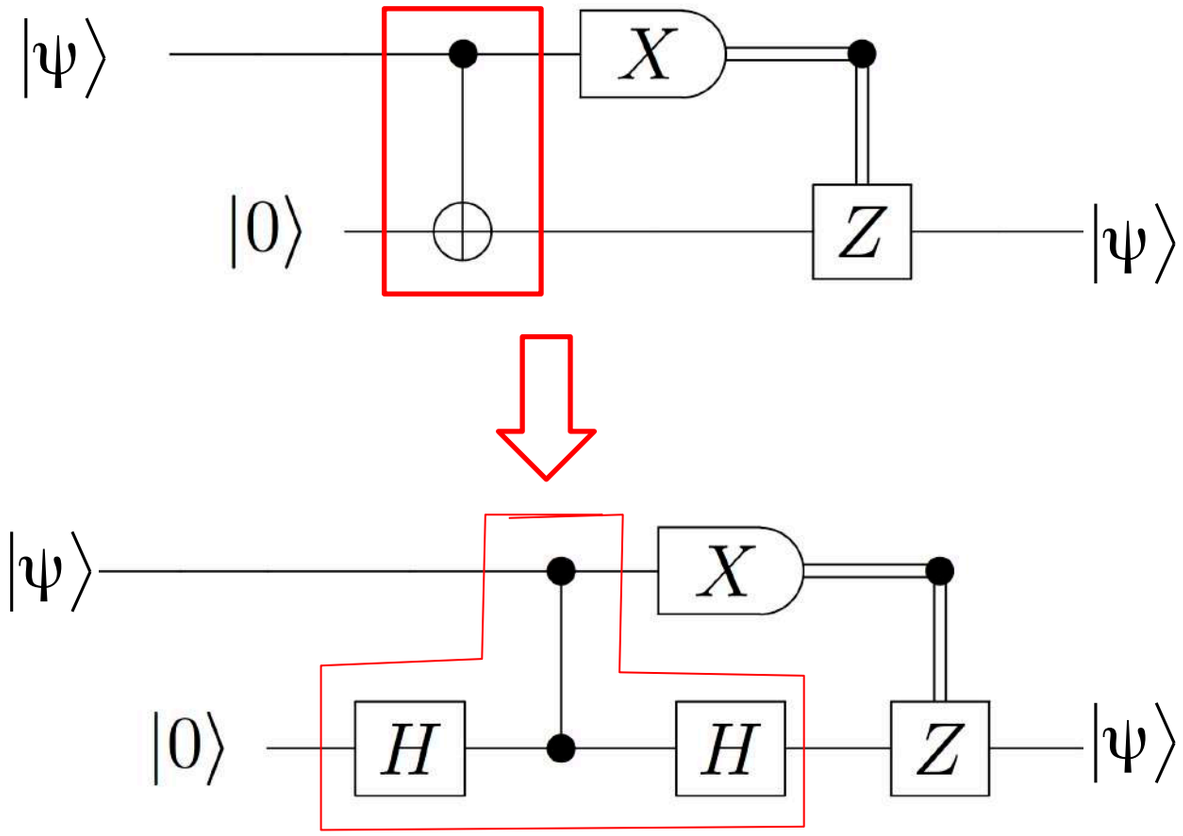

- X measurement result controls Z gate
- Direct calculation shows this works
- Identity transforms CNOT into CZ

MBQC: step-by-step

3 versions of the "1-bit *Z* teleportation" circuit:

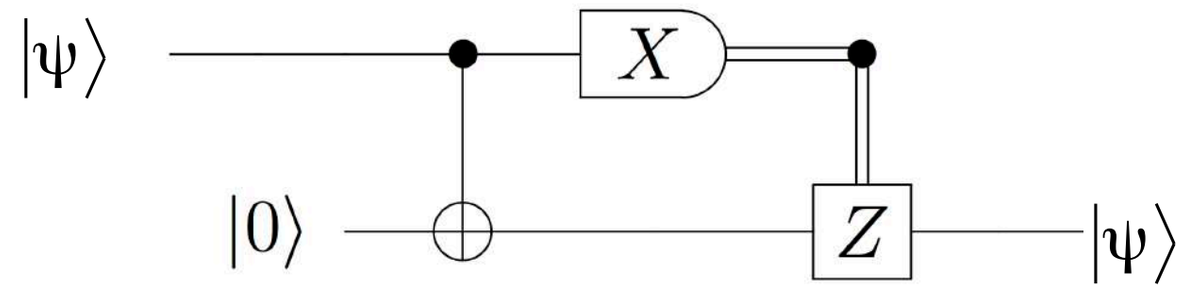

- X measurement result controls Z gate
- Direct calculation shows this works

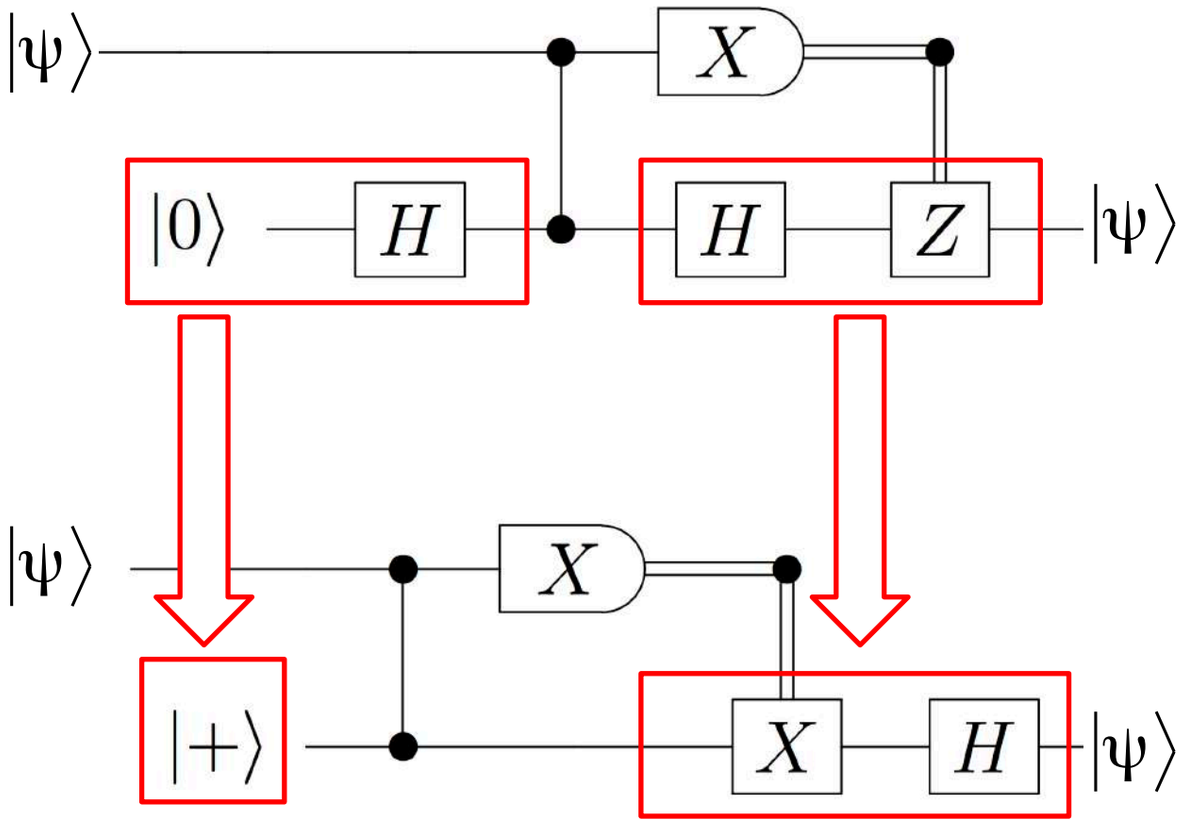

- Identity transforms CNOT into CZ
- Left H incorporated in input $|+\rangle$
- HZ = XH identity

MBQC: step-by-step

3 versions of the "1-bit *Z* teleportation" circuit:

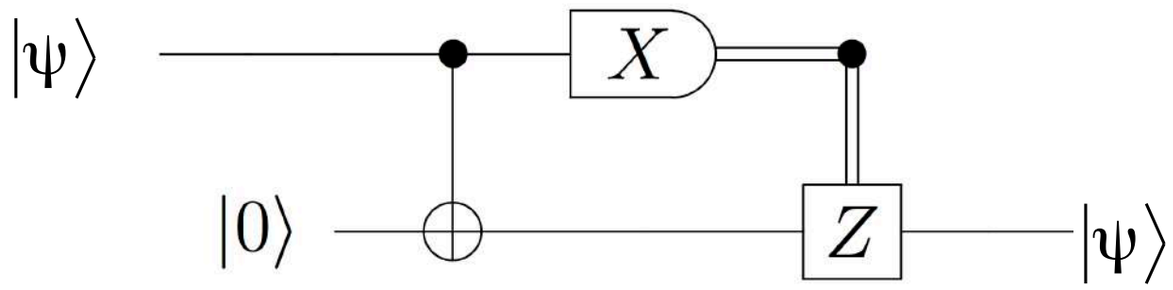

- X measurement result controls Z gate
- Direct calculation shows this works

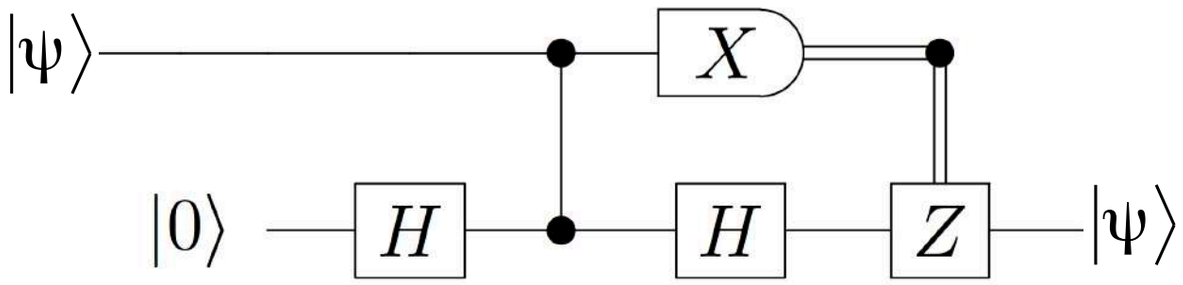

- Identity transforms CNOT into CZ

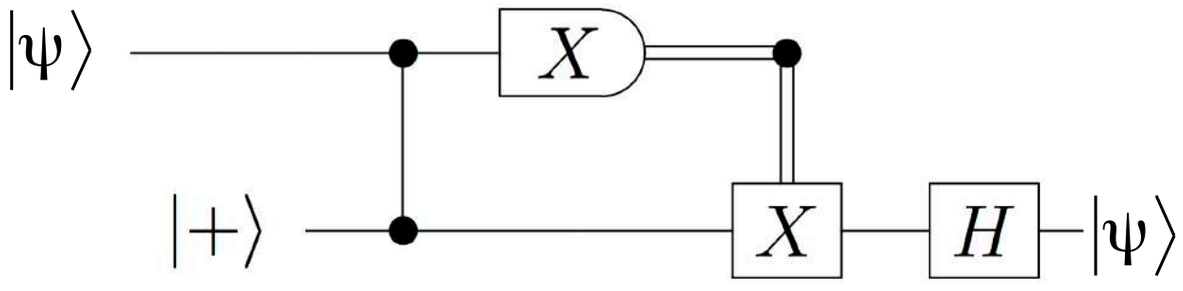

- Left H incorporated in input $|+\rangle$
- HZ = XH identity

So far: no computation, but: auxiliary qubit initialized in $|+\rangle$ state; CZ gate creates entanglement

MBQC: step-by-step

Now let's teleport the unitary $U(\theta) = \exp(i\theta Z/2)$:

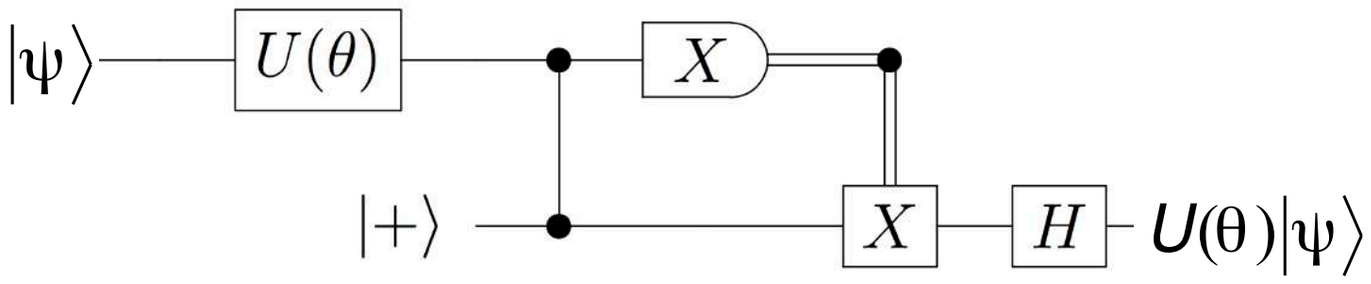

MBQC: step-by-step

Now let's teleport the unitary $U(\theta) = \exp(i\theta Z/2)$:

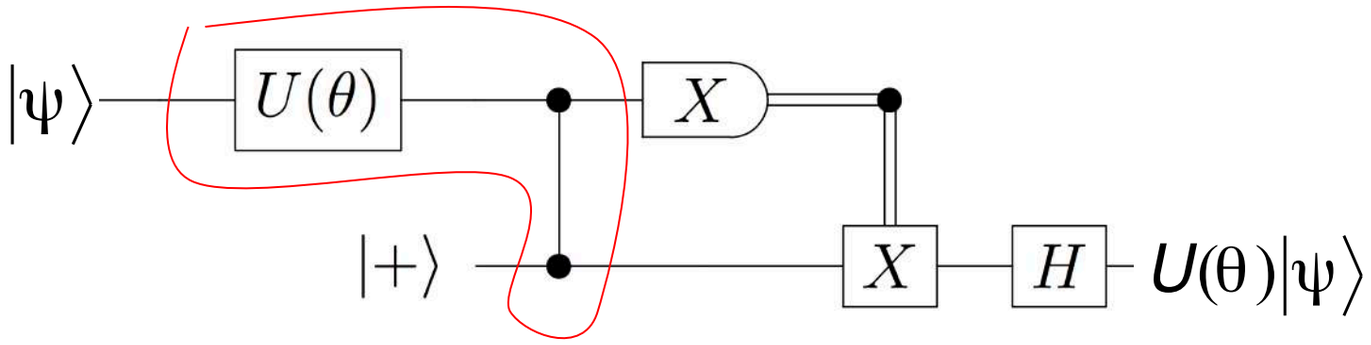

- U commutes with CZ

MBQC: step-by-step

Now let's teleport the unitary $U(\theta) = \exp(i\theta Z/2)$:

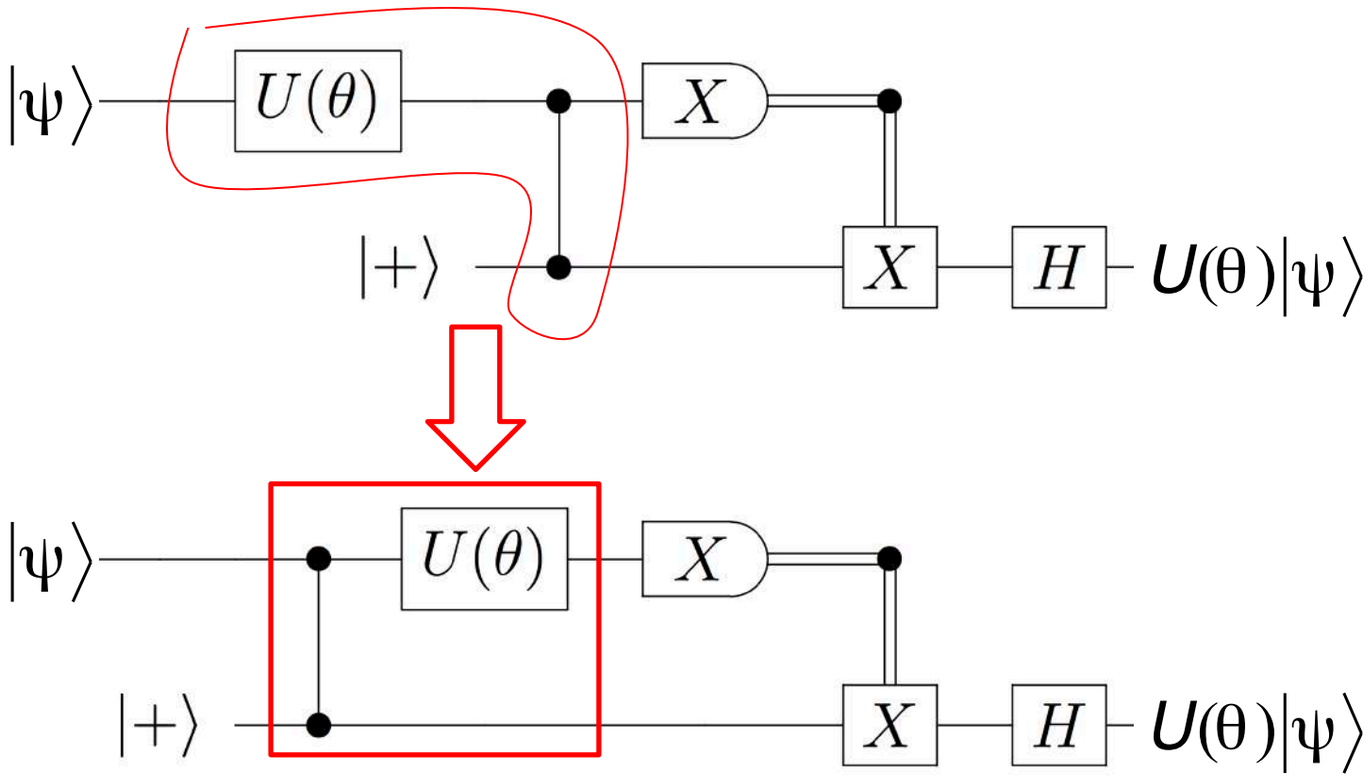

- U commutes with CZ

MBQC: step-by-step

Now let's teleport the unitary $U(\theta) = \exp(i\theta Z/2)$:

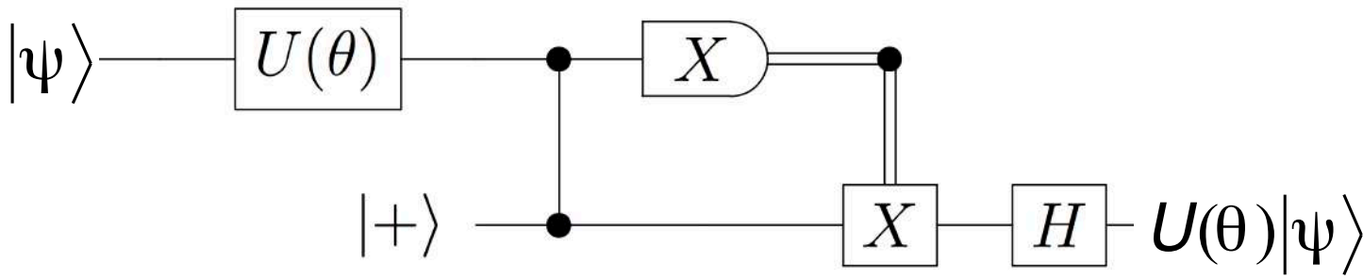

- U commutes with CZ

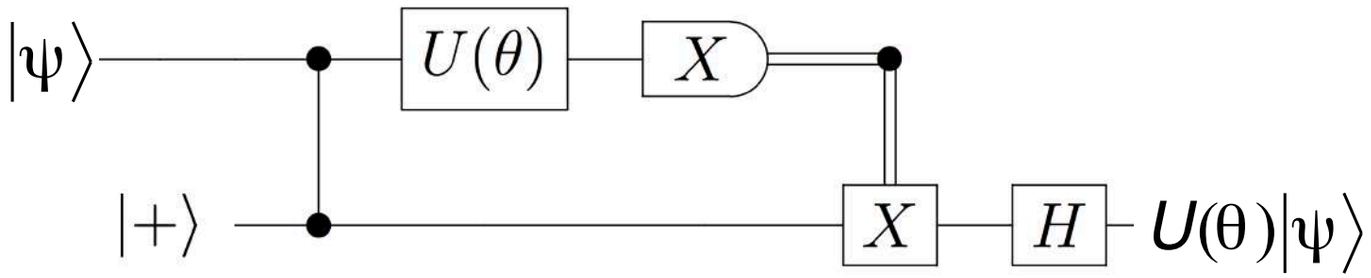

MBQC: step-by-step

Now let's teleport the unitary $U(\theta) = \exp(i\theta Z/2)$:

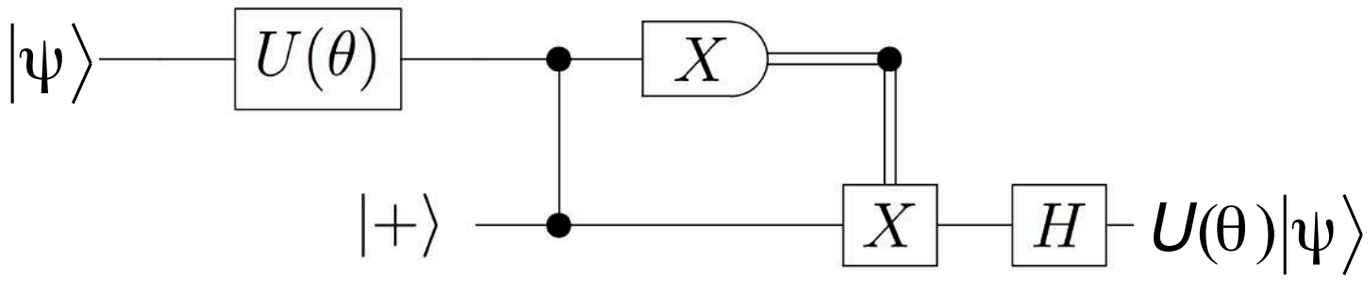

- U commutes with CZ

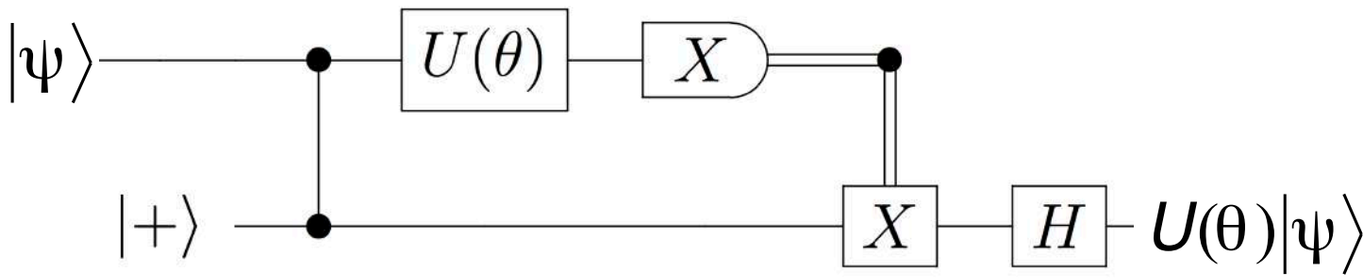

- U followed by X-measurement = measurement in *x-y* plane of Bloch sphere:

$$U^{+} X U = R(\theta) = \cos(\theta) X + \sin(\theta) Y$$

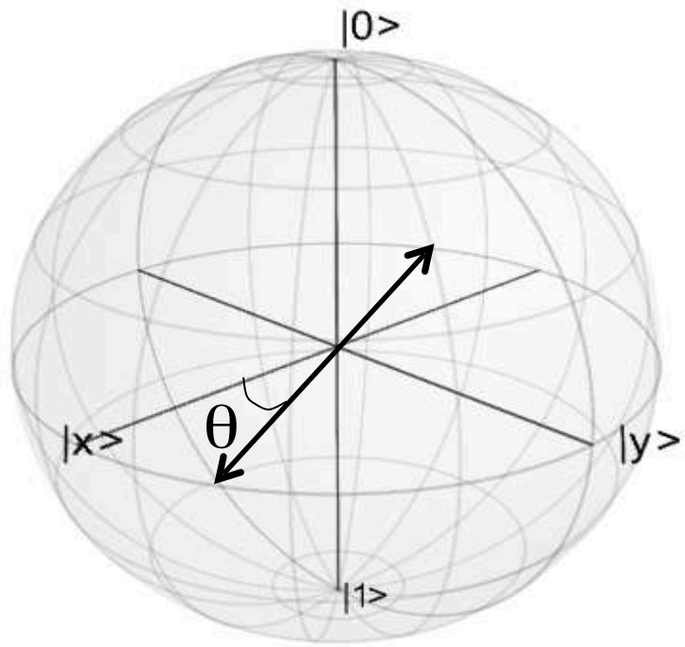

MBQC: step-by-step

Now let's teleport the unitary $U(\theta) = \exp(i\theta Z/2)$:

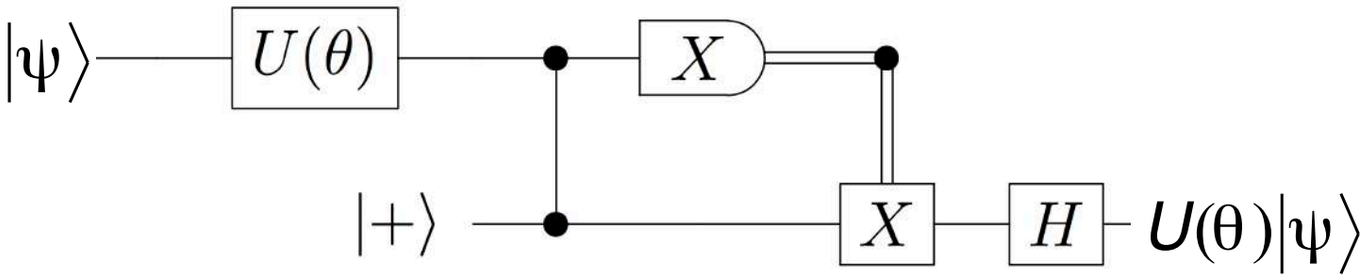

- U commutes with CZ

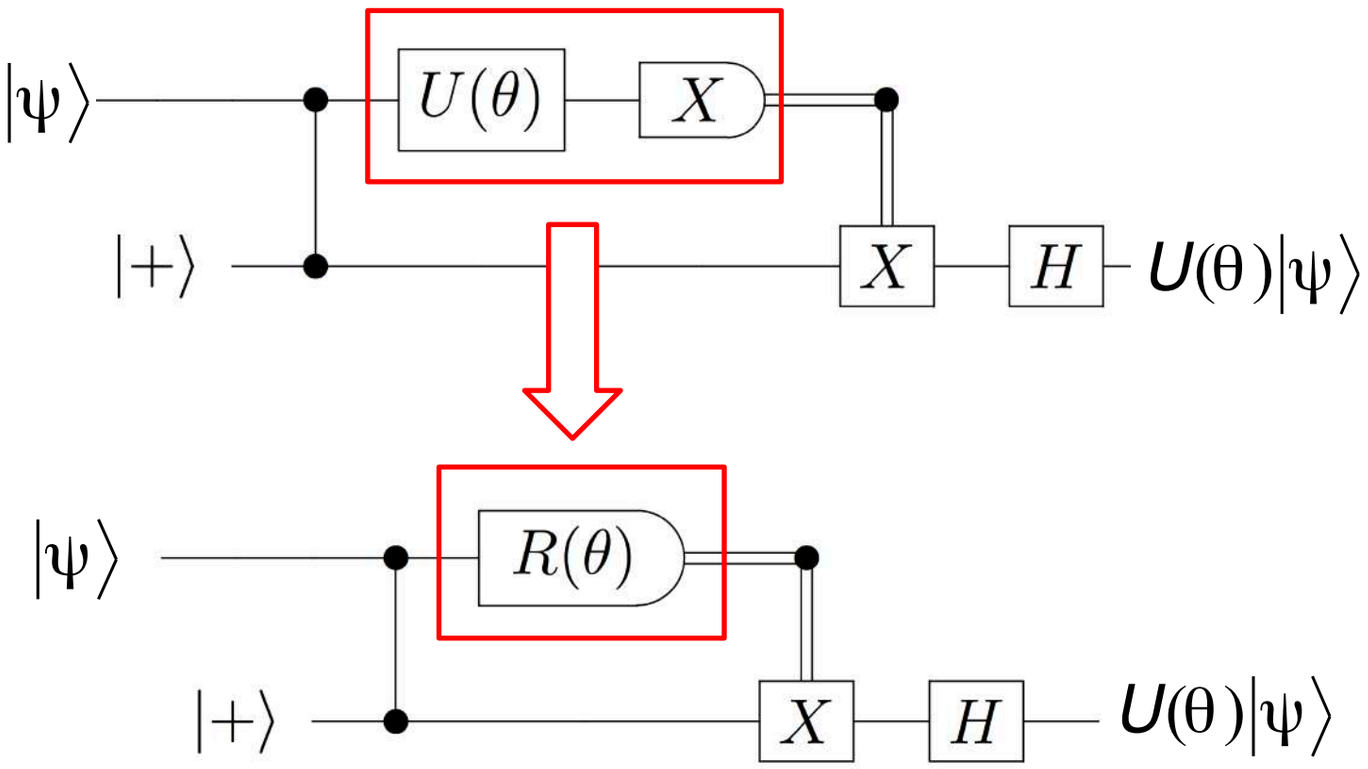

- U followed by X-measurement = measurement in *x*-*y* plane of Bloch sphere:

$$U^{+} X U = R(\theta) = \cos(\theta) X + \sin(\theta) Y$$

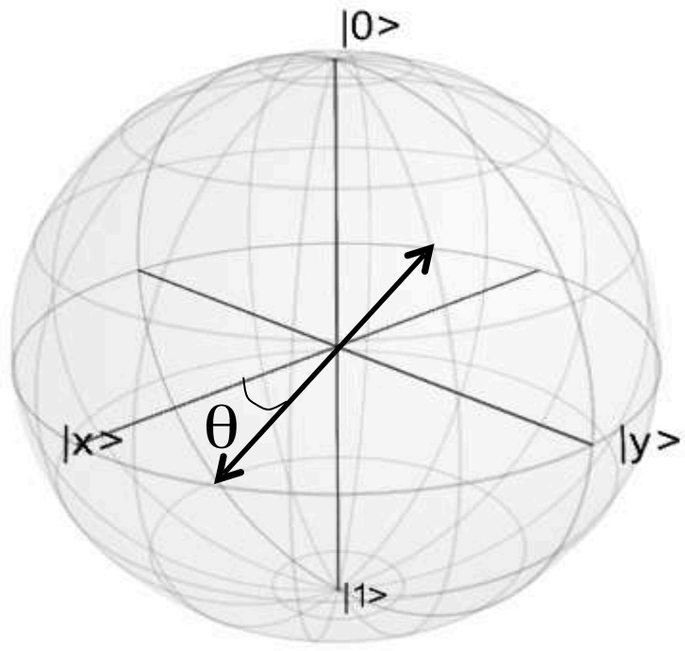

MBQC: step-by-step

Now let's teleport the unitary $U(\theta) = \exp(i\theta Z/2)$:

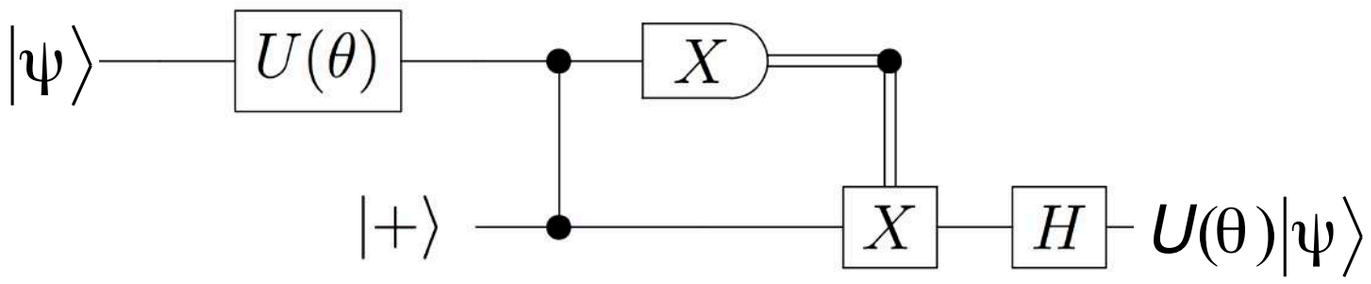

- U commutes with CZ

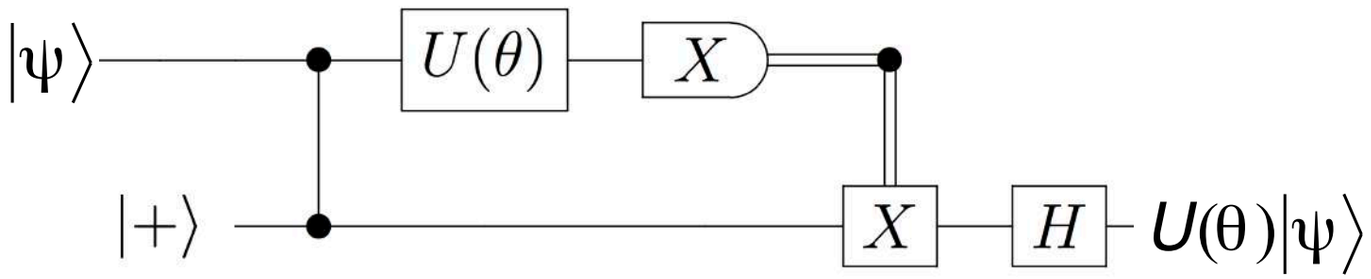

- U followed by X-measurement = measurement in *x-y* plane of Bloch sphere:

$$U^{+} X U = R(\theta) = \cos(\theta) X + \sin(\theta) Y$$

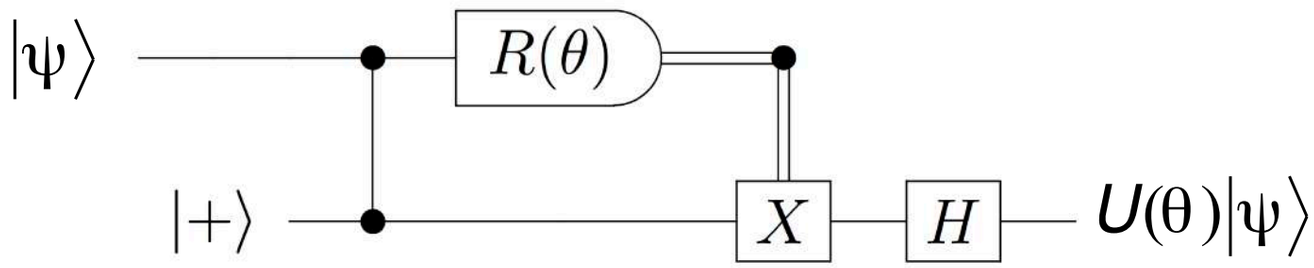

Evolved state $U(\theta)|\psi\rangle$ is teleported, via entanglement and right choice of measurement basis of top qubit

(*gate teleportation* idea of Gottesman and Chuang)

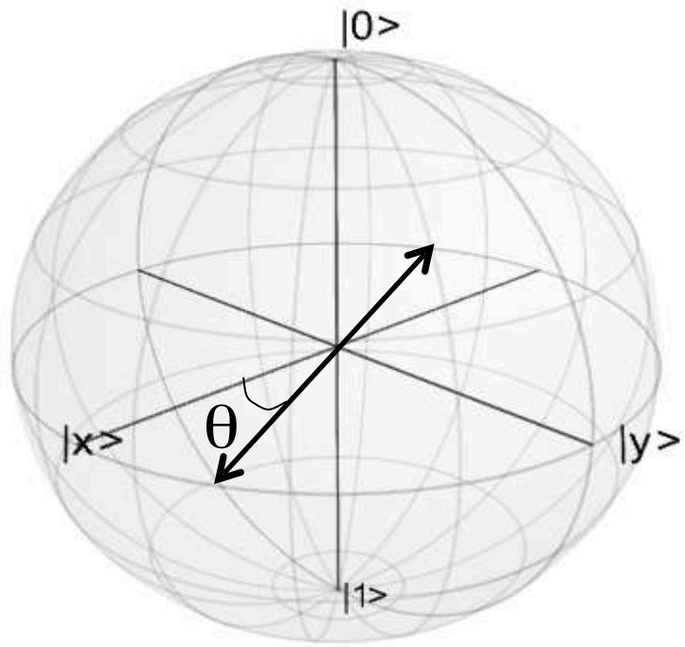

MBQC: step-by-step

Now two different unitaries in sequence:

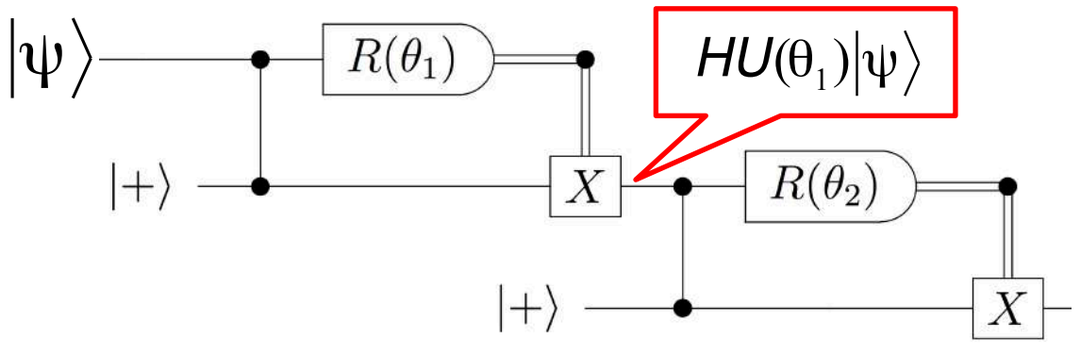

- Two gate teleportations, without final H gates, result in final state

$$HU(\theta_2)HU(\theta_1)|\psi\rangle$$

MBQC: step-by-step

Now two different unitaries in sequence:

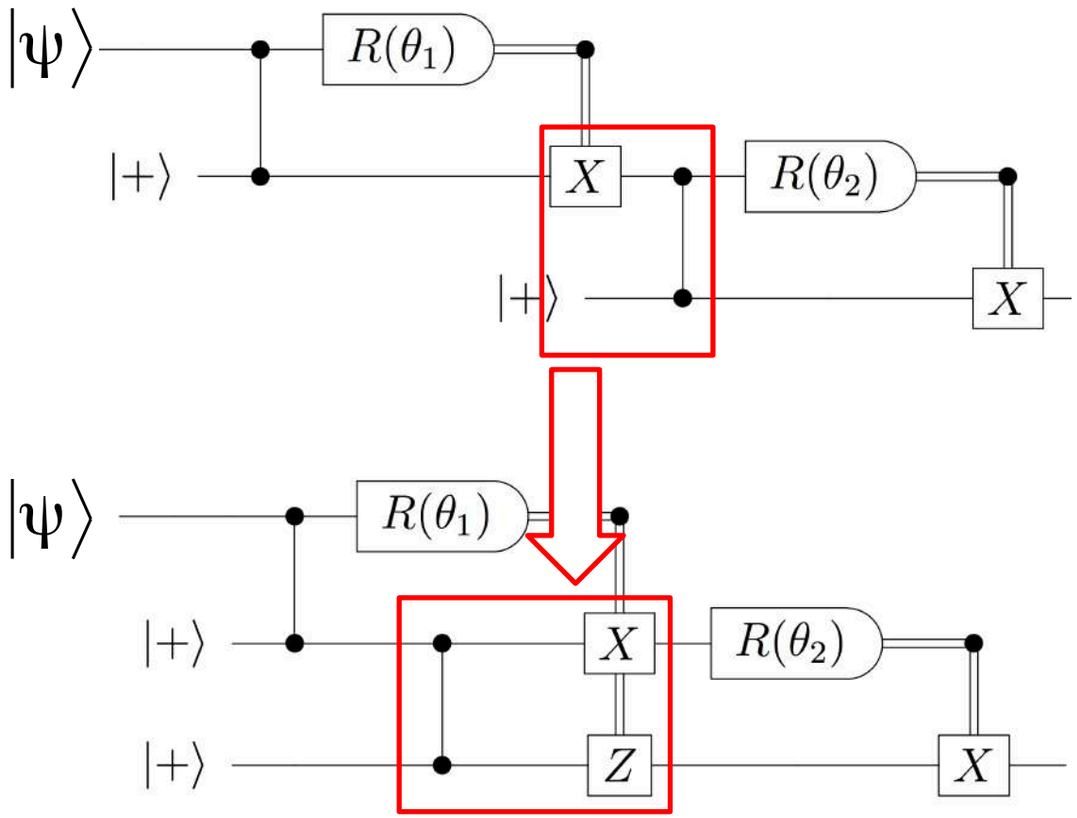

- Two gate teleportations, without final H gates, result in final state

$$HU(\theta_2)HU(\theta_1)|\psi\rangle$$

- Now commute X and CZ, which requires adding Z gate controlled by measurement 1

MBQC: step-by-step

Now two different unitaries in sequence:

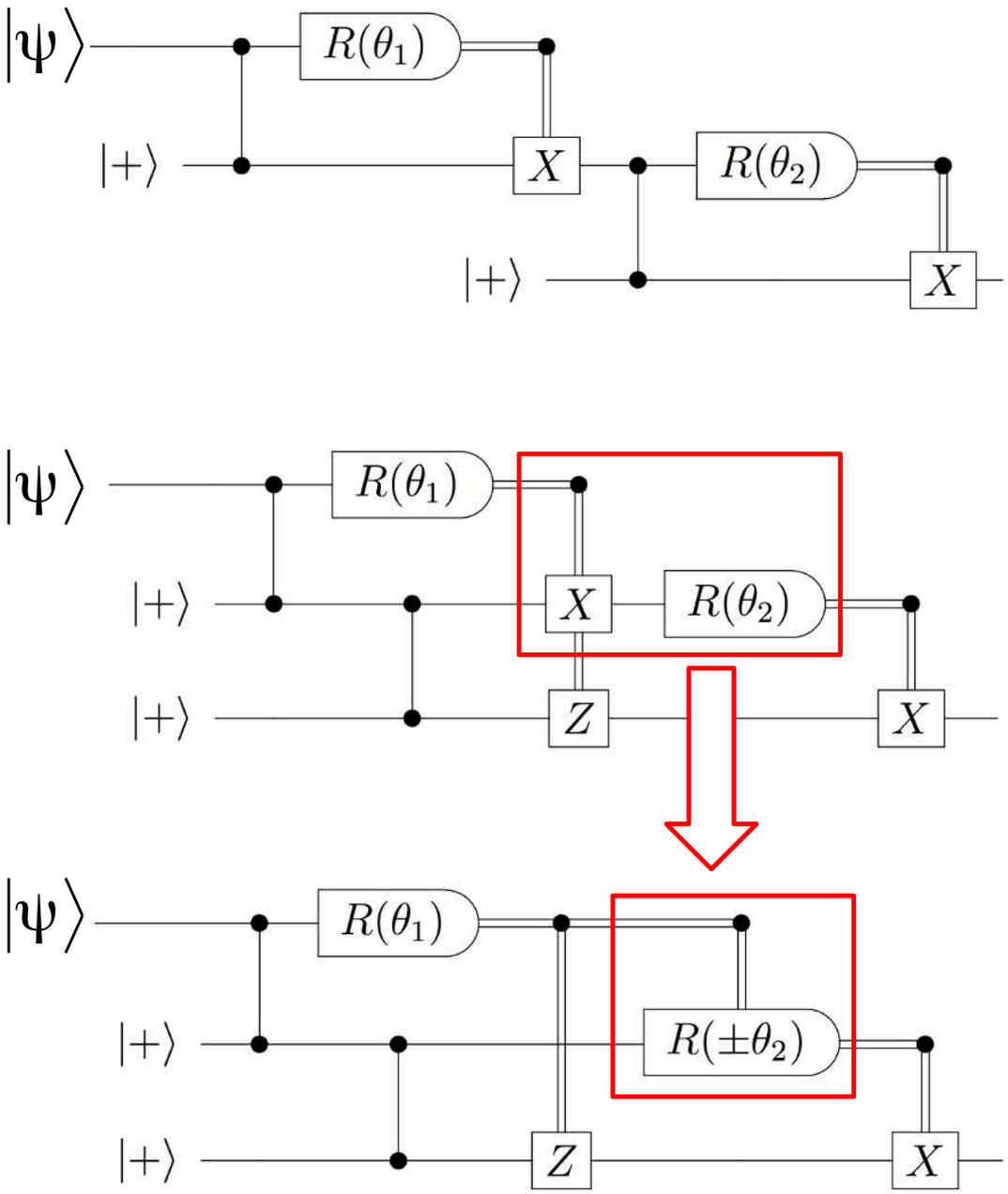

- Two gate teleportations, without final H gates, result in final state

$$HU(\theta_2)HU(\theta_1)|\psi\rangle$$

- Now commute X and CZ, which requires adding Z gate controlled by measurement 1

- Incorporate X correction into measurement angle of 2. When X is applied $\theta_2 \rightarrow -\theta_2$ because:

$$XR(\theta)X = R(-\theta)$$

MBQC: step-by-step

Now two different unitaries in sequence:

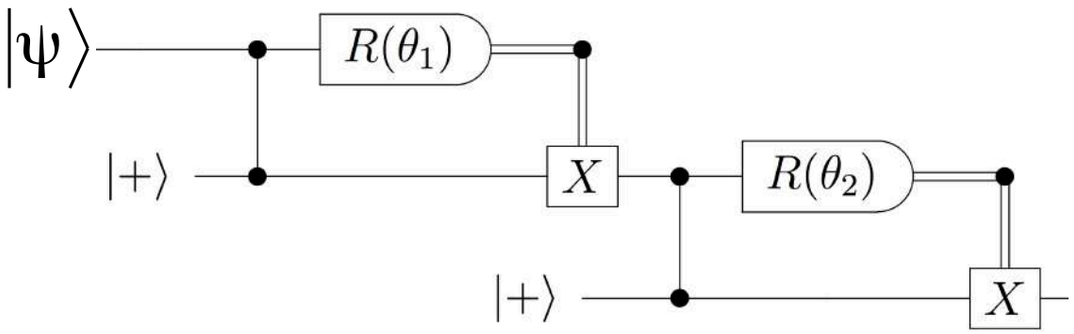

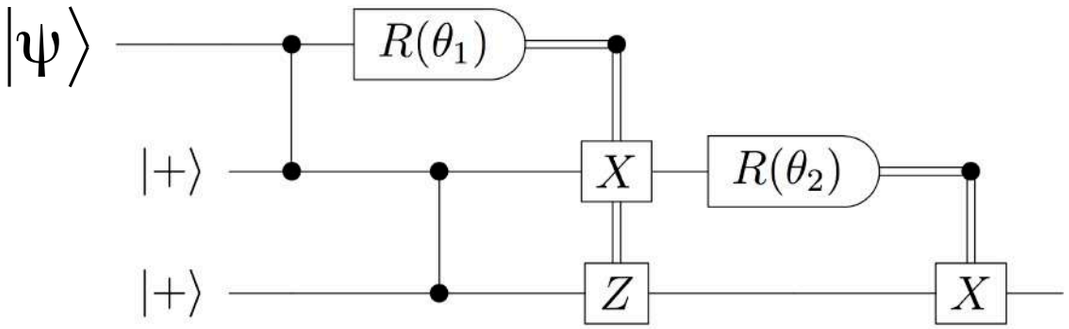

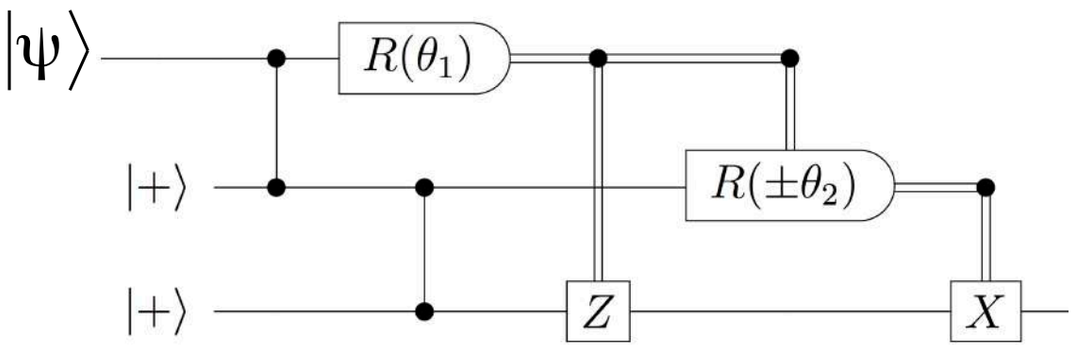

- Two gate teleportations, without final H gates, result in final state

$$HU(\theta_2)HU(\theta_1)|\psi\rangle$$

- Now commute X and CZ, which requires adding Z gate controlled by measurement 1

- Incorporate X correction into measurement angle of 2. When X is applied $\theta_2 \rightarrow -\theta_2$ because:

$$XR(\theta)X = R(-\theta)$$

- By adapting measurement 2 according to outcome of 1, we can apply

$$HU(\theta_2)HU(\theta_1)|\psi\rangle$$

- Easy to extend to multiple single-qubit unitaries, and $\{HU(\theta)\}$ is universal set for 1 qubit

Adaptivity allows for any single-qubit unitary to be implemented in the one-way model
CZ gates can be implemented similarly, propagation to beginning induces extra corrections

Entanglement resources for MBQC

- **Graph states**: class of states obtainable by

  1. Initialization of a set of qubits in $|+\rangle$ states
  2. CZ gates between neighboring vertices in a graph

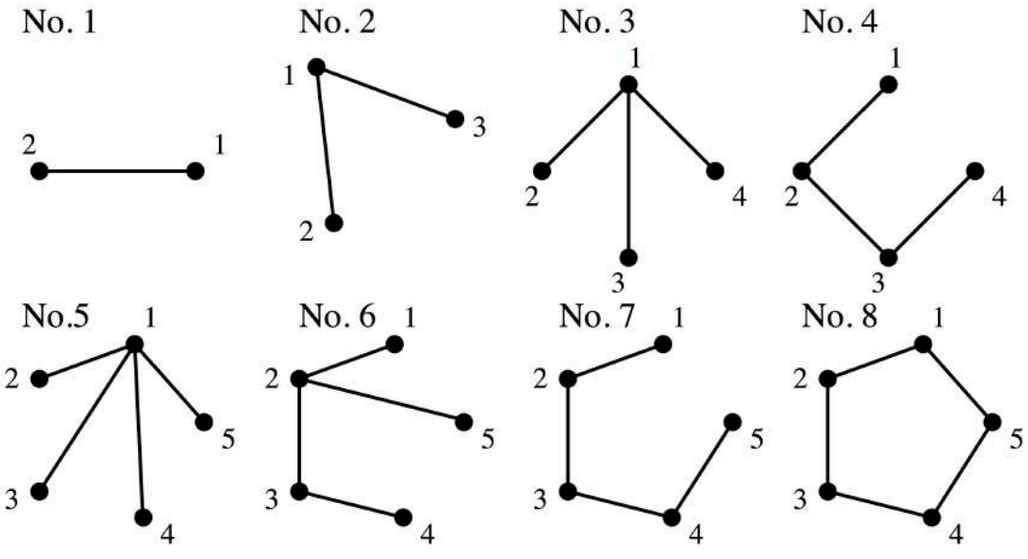

- Examples:

- No. 7 (5 qubits): sufficient for any single qubit unitary
- No. 3 (4 qubits): sufficient for CNOT

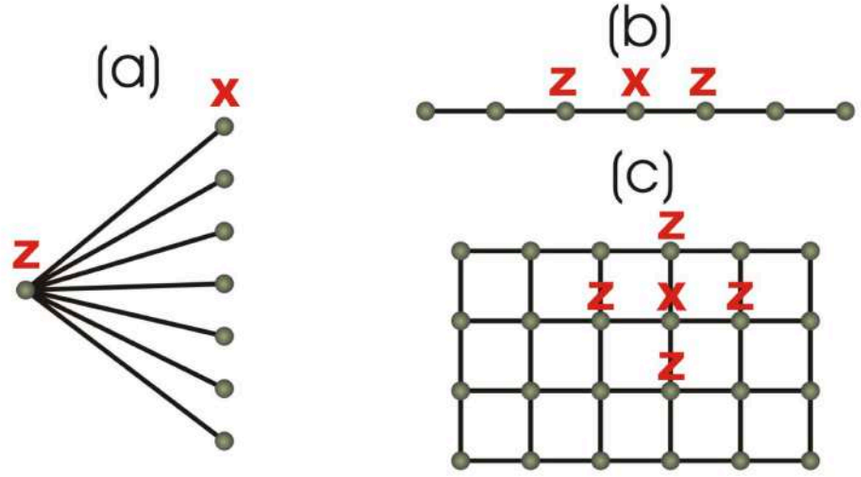

- Alternative characterization of graph states:

- Unique state which is simultaneous eigenstate (with eigenvalue 1) of set of operators

$$\left\{ K_i = X_i \bigotimes_{j \text{ neighbor of i}} Z_j \right\}$$

See proposition 2 of Hein et al., arXiv quant-ph-0602096.

Exercises

1- Example: Simplest graph state: find the state corresponding to the 2-vertex connected graph.



2- Example: XX, ZZ. a) Find state stabilized by XX, ZZ.
b) What other Pauli stabilizes this state?

(How can we measure XX, ZZ? How is it different from measuring X1, 1X?)

3: Triangle graph. Find the graph state corresponding to the triangle graph. Show it is LC-equivalent to the GHZ state.

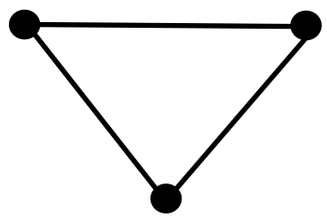

$$|GHZ> = \frac{1}{\sqrt{2}}(|000> + |111>)$$

Entanglement resources for MBQC

- Some known universal resources for MBQC: 2D triangular, hexagonal, Kagome lattices

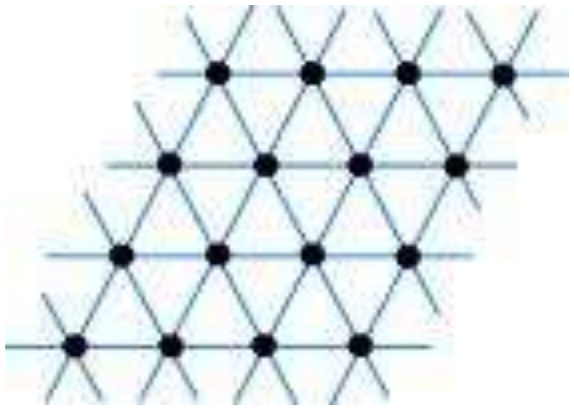
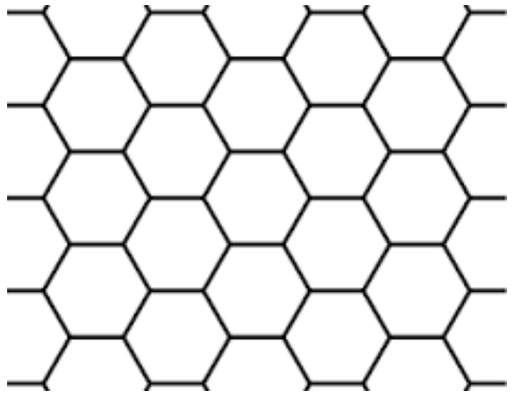
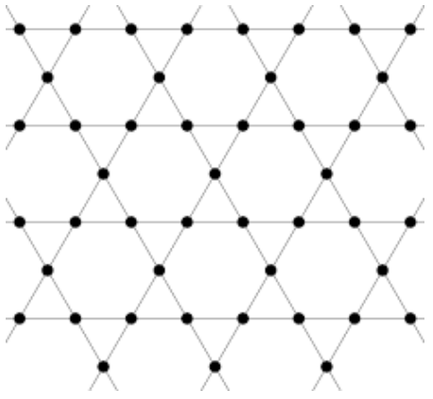

  - These resources are "universal state preparators" = strong notion of universality

- Other resource states enable simulation of classical measurement statistics of any universal quantum computer = weaker notion of universality
  - Some of these require a universal classical computer (instead of a parity computer)

[Gross *et al.*, PRA 76, 052315 (2007)]

- MBQC on some resource states is known to be simulable, e.g. on 1D chain

[Markov, Shi, SIAM J. Comput. 38, 963 (2008)]

Entanglement resources for MBQC

- **Graph states**: different graph states may be local-Clifford (LC) equivalent, i.e. one can be obtained from the other by applying sequences of S, H gates on each qubit.

  Example: GHZ states

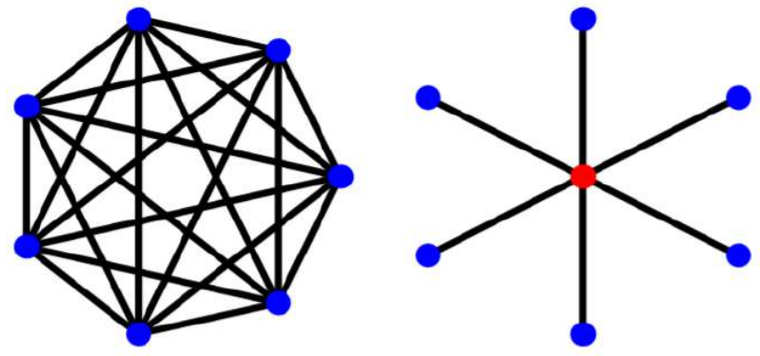

- **Theorem**: every stabilizer state is LC-equivalent to a graph state. Proof: see proposition 4 of Hein et al., https://arxiv.org/abs/quant-ph/0602096

- **Theorem**: all LC-equivalent graph states of a given graph state can be found by using a sequence of simple graph-manipulating rule called **local complementation**. Proof: see proposition 5 of Hein *et al.*

Local complementation rule - manipulating graph states

- **Local complementation:** graph-changing rule that obtains LC-equivalent graph states

Graph rule: choose vertex, complement subgraph induced by its neighbors

Example:

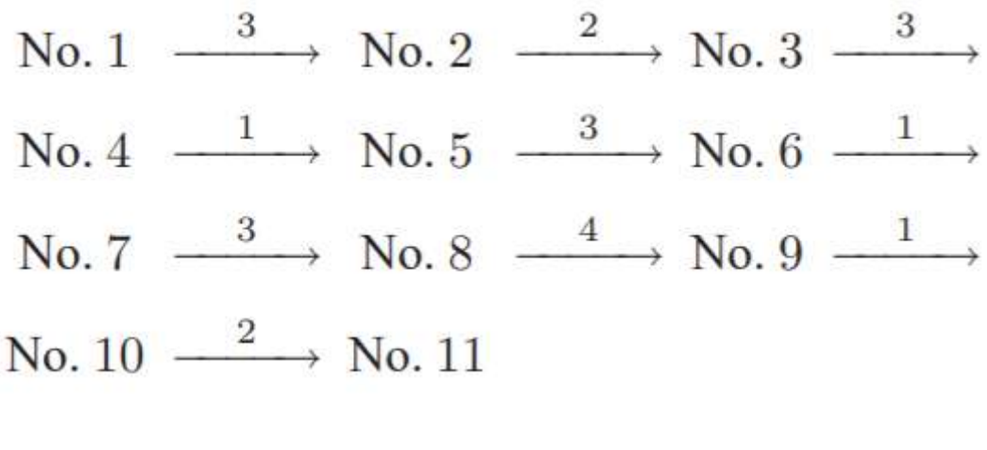

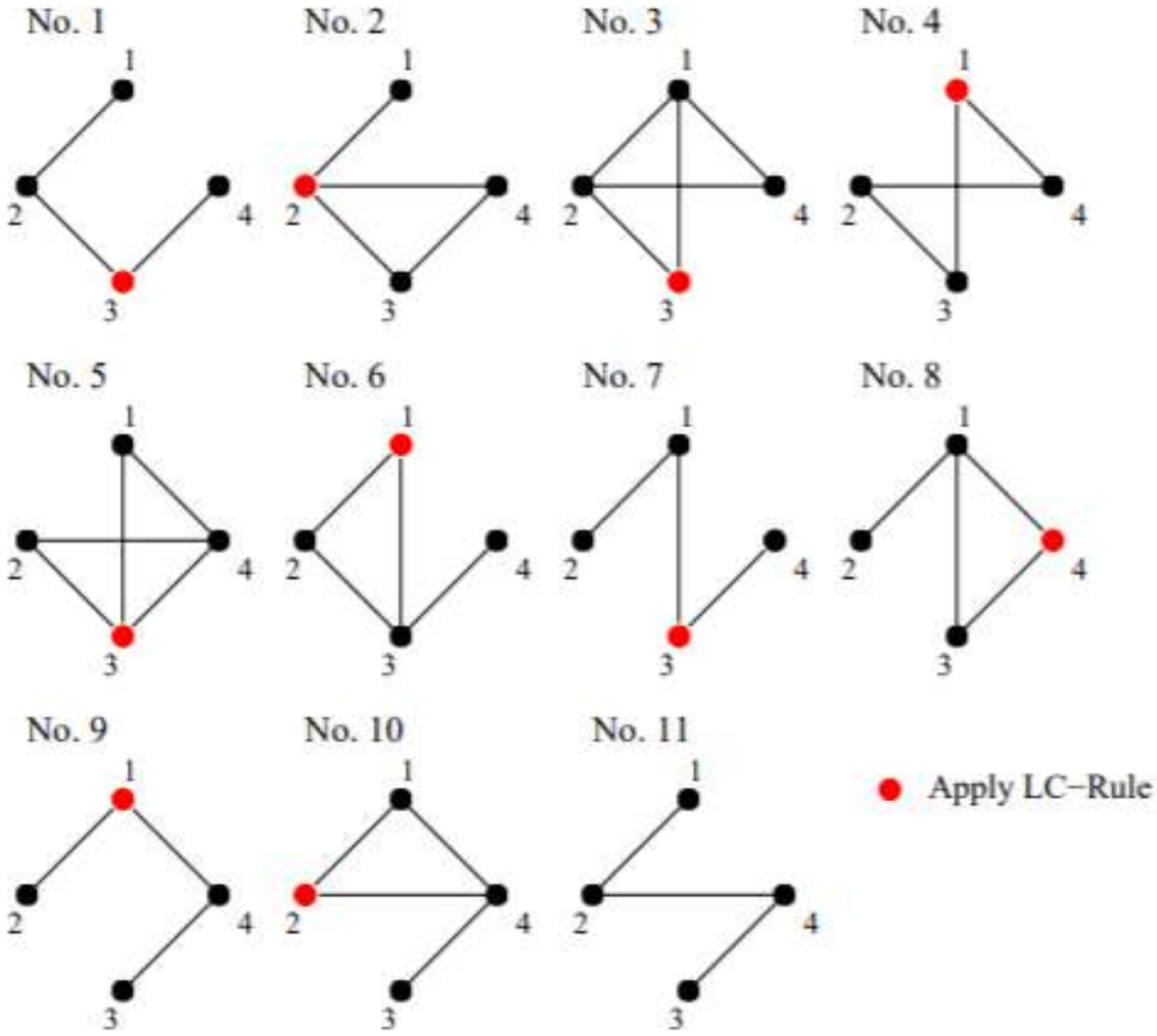

- **Example GHZ**: How to transform between these LC-equivalent graphs? i.e. complete graph and star graph

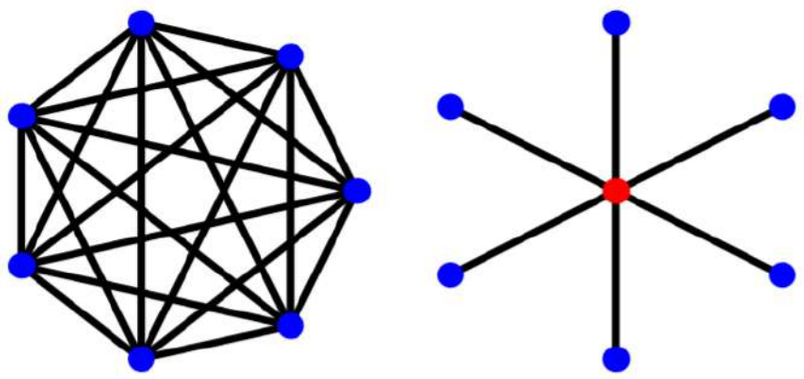

Taken from: Hein *et al.*, arxiv quant-ph/0602096

Entanglement resources for MBQC

M. HEIN, W. DÜR, J. EISERT, R. RAUSSENDORF, M. VAN DEN NEST and H.-J. BRIEGEL

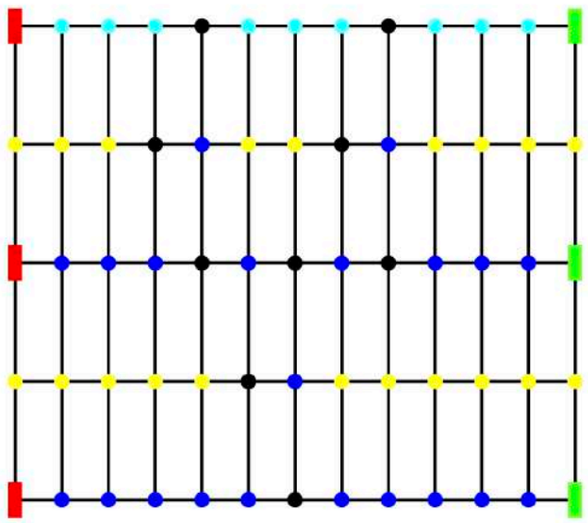

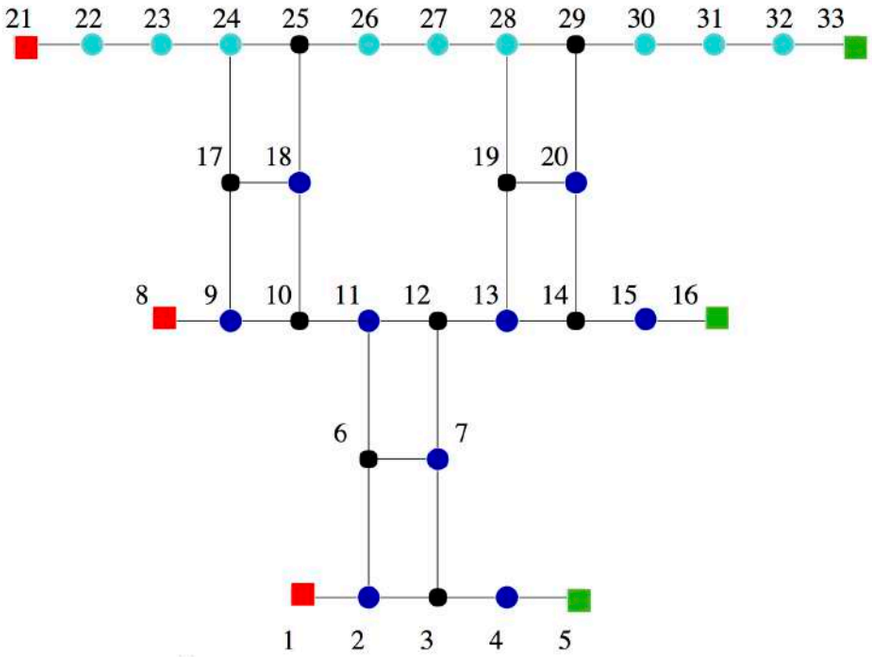

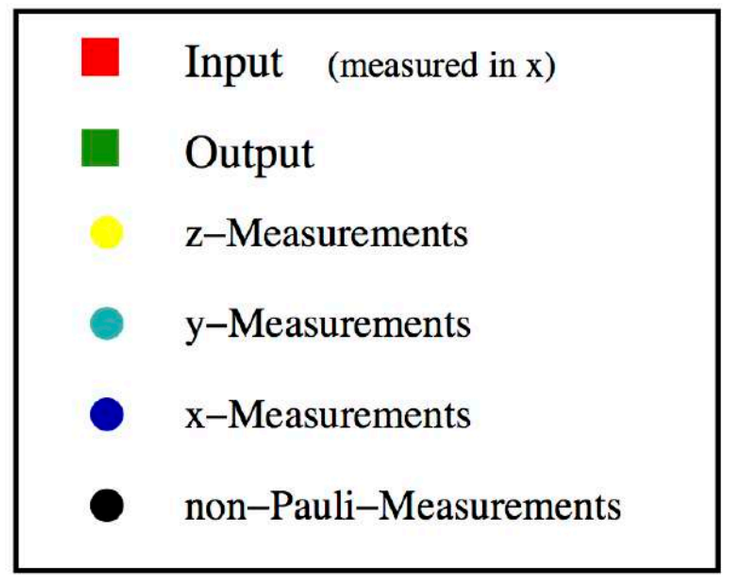

from: Proc. Int. School of Physics "Enrico Fermi" on "Quantum Computers, Algorithms and Chaos", Varenna, Italy (2005)

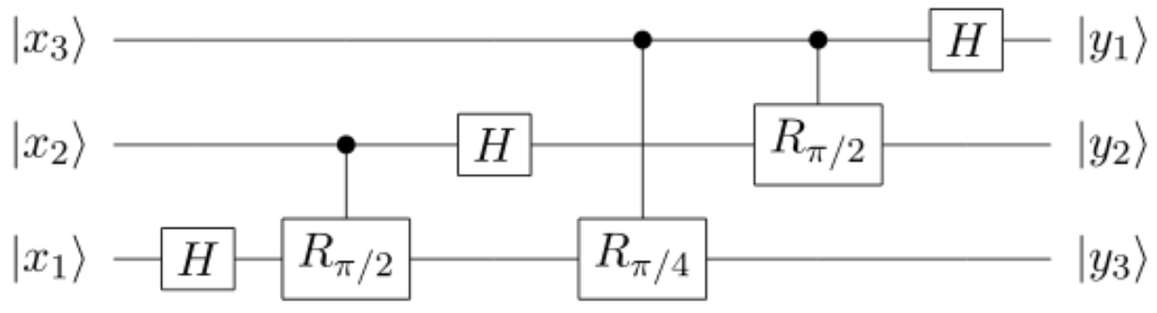

3-qubit QFT

- Example of universal graph: 2D square lattice (called **cluster state**)
  - Above: MBQC implementation of 3-qubit discrete Fourier Transform
  - "Unwanted" vertices deleted by Z-measurements; resulting corrections must be taken into account

Time-ordering in MBQC

M. Hein, W. Dür, J. Eisert, R. Raussendorf, M. van den Nest and H.-J. Briegel

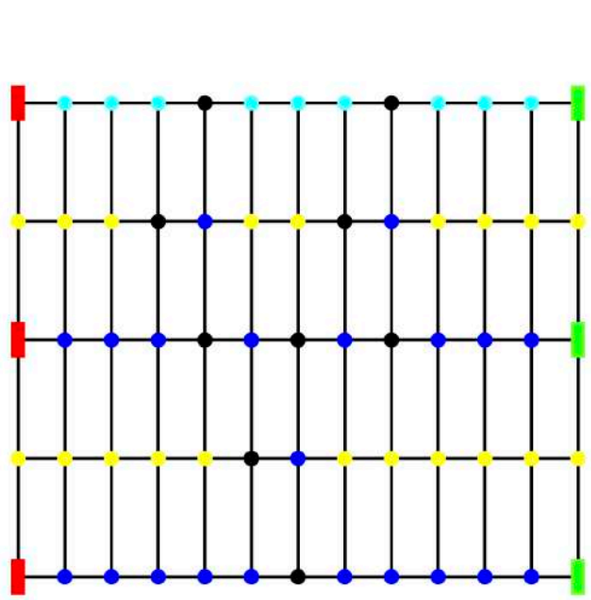

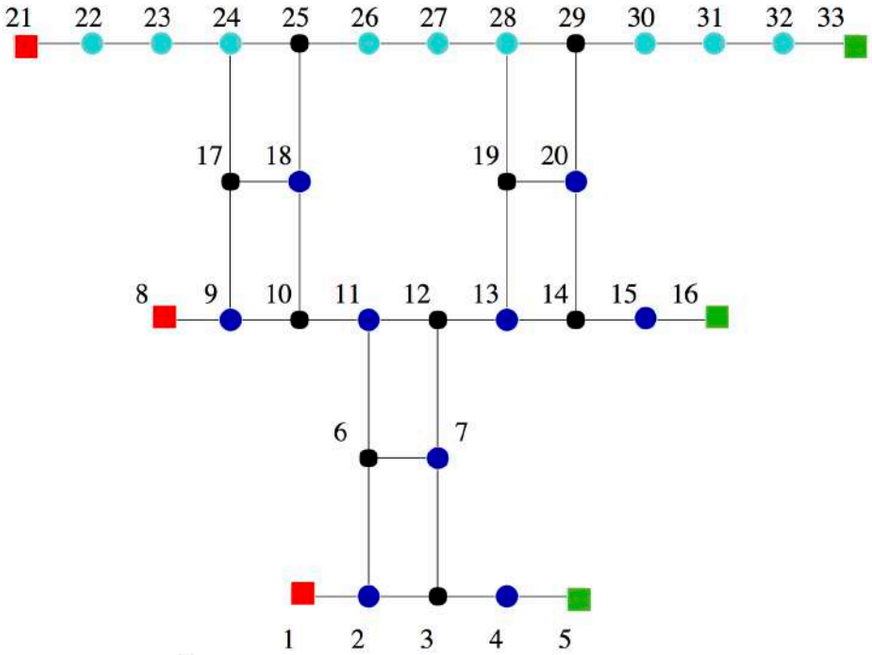

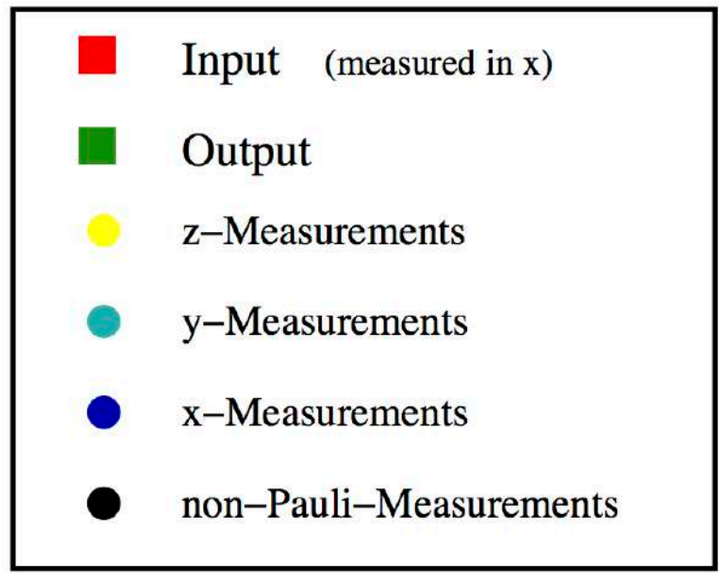

from: Proc. Int. School of Physics "Enrico Fermi" on "Quantum Computers, Algorithms and Chaos", Varenna, Italy (2005)

- Note that some measurements are **not adaptive**, but in fixed bases. These can be performed at once at beginning of computation
- All Clifford gates are non-adaptive and can be done in one time-step
- MBQC neatly separates Clifford (non-adaptive) from non-Clifford (adaptive) parts of the computation

Time-ordering in MBQC

- **Stabilizer measurements** take graph states to graph states:

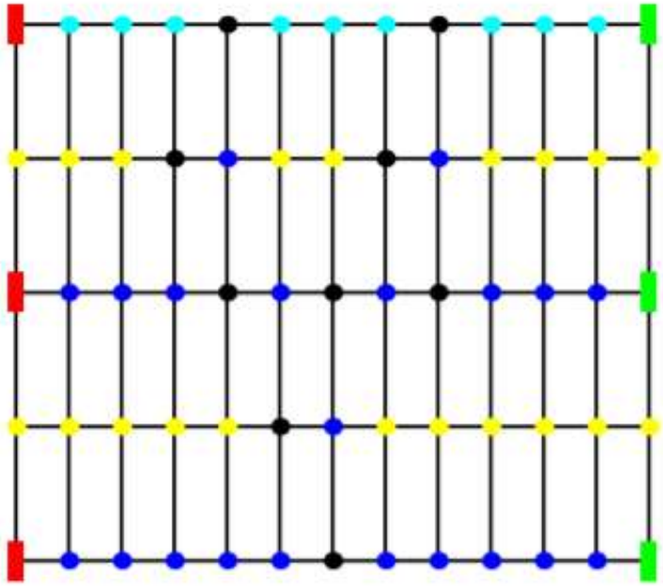

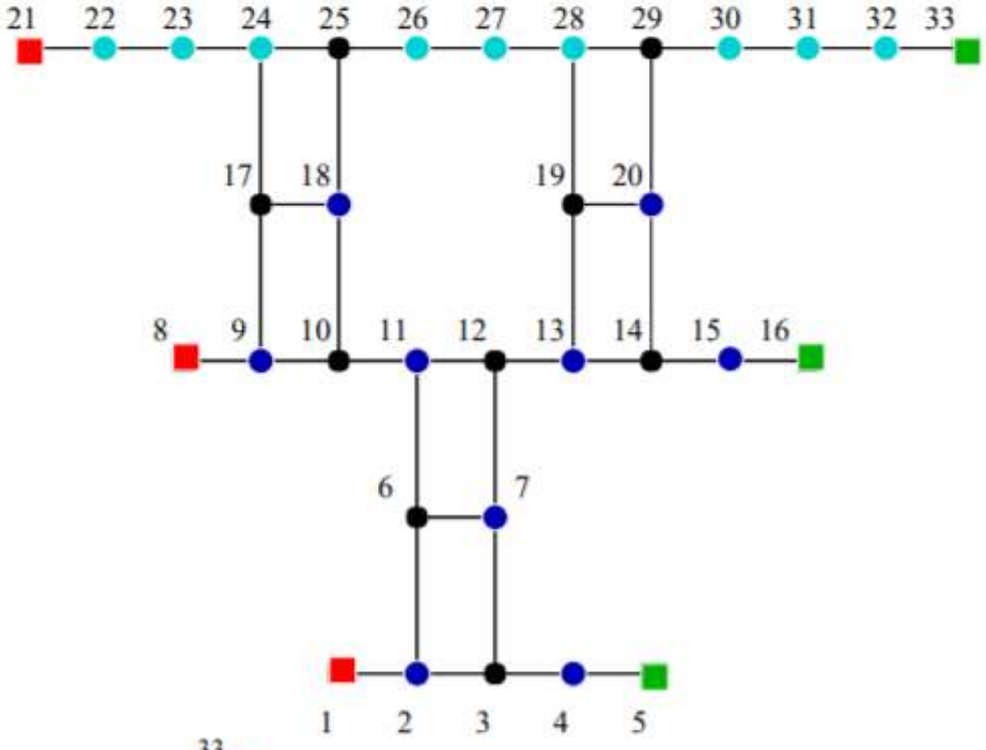

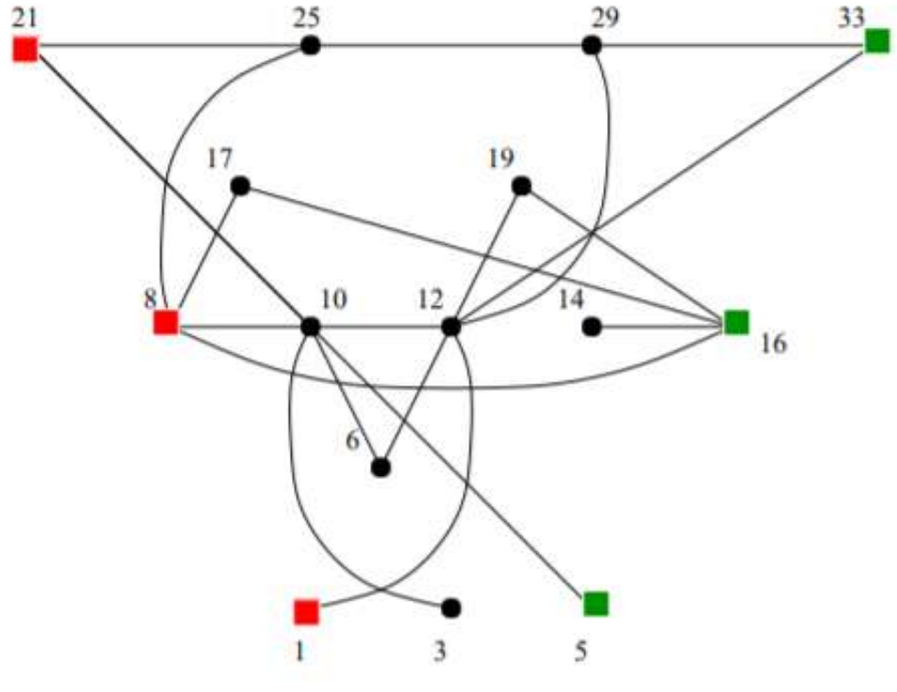

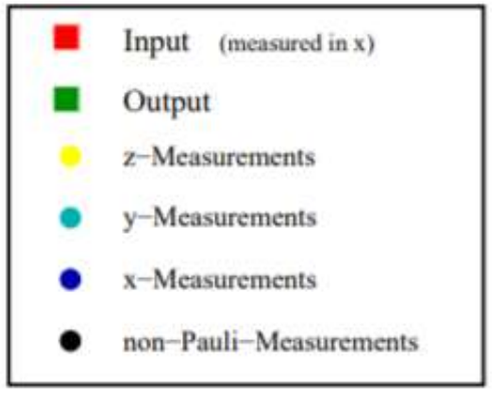

Circuit optimization: example

- We've seen that MBQC allows for implementation of Clifford operations in constant time. Back-translating to the circuit model we obtain circuits which implement all the Clifford part in constant time:

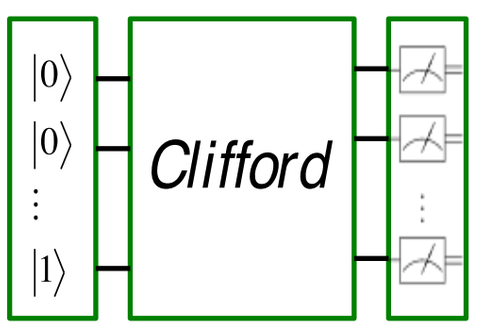

Clifford circuit

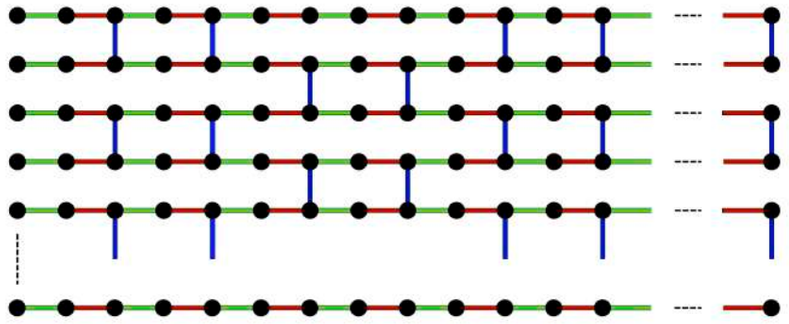

MBQC on universal graph state

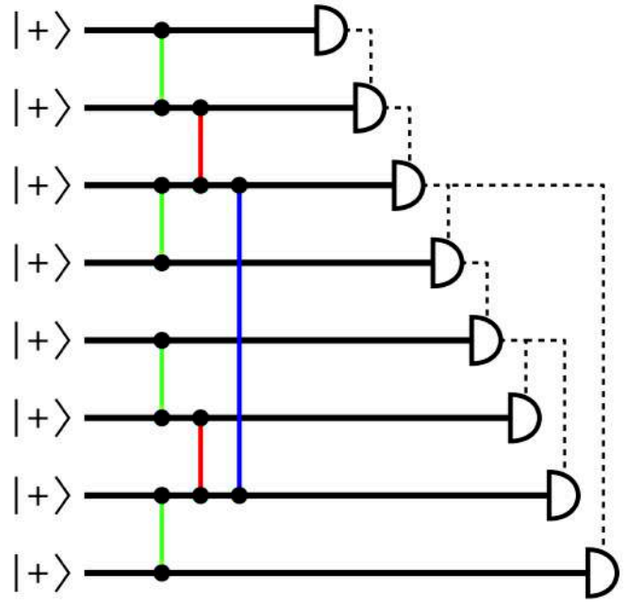

Circuit translation of MBQC protocol

- No adaptativity in Clifford MBQC -> no adaptivity in circuit.
- Depth is 4 (3 CZs and 1 single-qubit unitary for measurement)

- **Trade-off**: depth becomes constant, at cost of increasing number of qubits

- For non-Clifford circuits, depth increases by the number of layers of non-Clifford gates

Growing graph states via Pauli measurements

- Start with small, constant-size graph states
- Use **fusion measurements** to connect small states into larger states probabilistically
  (see S. Bartolucci et al, arXiv 2101.09310 [quant-ph])
- Use error-correcting techniques to deal with unsuccessful fusions



XX, ZZ

Exercise 4: quantum repeaters

Exercise 4: starting from two EPR pairs, show how a XX, ZZ (i.e. Bell) measurement on a qubit from each results in long-range entanglement i.e. show that successful measurement of XX, ZZ on the orange-shaded qubits (see right) results in an entangled pair between the most distant qubits in the chain.

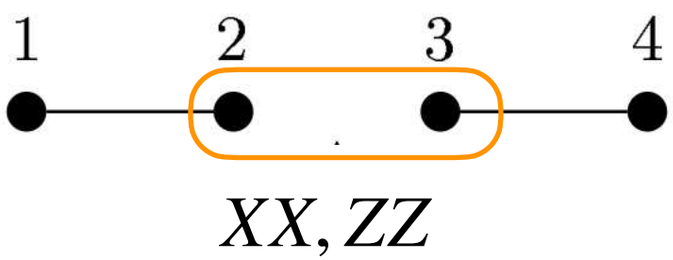

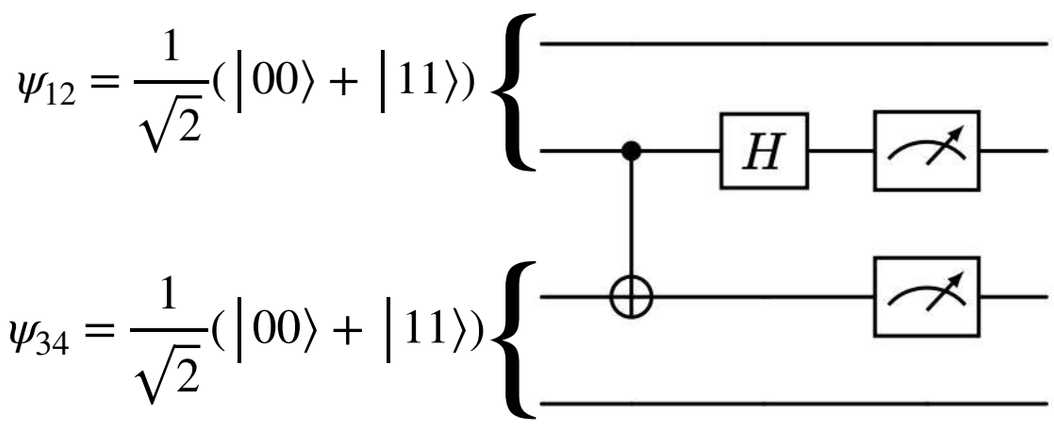

$$|\psi_{12}\rangle\,|\psi_{34}\rangle = \tfrac{1}{2}\big[\,|0000\rangle + |0011\rangle + |1100\rangle + |1111\rangle\,\big]$$
$$\xrightarrow{CNOT_{2\to 3}} \tfrac{1}{2}\big[\,|0000\rangle + |0011\rangle + |1110\rangle + |1101\rangle\,\big]$$
$$\xrightarrow{H_2} \tfrac{1}{2\sqrt{2}}\big[\,|0000\rangle + |0100\rangle + |0011\rangle + |0111\rangle + |1010\rangle - |1110\rangle + |1001\rangle - |1101\rangle\,\big]$$

$m_2 m_3$	$\rightarrow$	state of qubits $(1,4)$
00	$\rightarrow$	$\|\psi_{14}\rangle = \frac{1}{\sqrt{2}}(\|00\rangle + \|11\rangle)$
01	$\rightarrow$	$\frac{1}{\sqrt{2}}(\|01\rangle + \|10\rangle)$
10	$\rightarrow$	$\frac{1}{\sqrt{2}}(\|00\rangle - \|11\rangle)$
11	$\rightarrow$	$\frac{1}{\sqrt{2}}(\|01\rangle - \|10\rangle)$

Introduction to linear-optical quantum computation

Day	Topic
23/11 - Monday	Introduction Stabilizer formalism Measurement-based quantum computation (MBQC)
24/11 - Tuesday	Linear optics Multimode interferometers and boson sampling
25/11 - Wednesday	Scalable architectures for linear-optical quantum computation Simulation techniques

References: please check the course website for references and links to further material:

https://sites.google.com/id.uff.br/pqcictp/

Alternative implementation of MBQC: entangling as you go

- Instead of building a large graph state and they destroying it bit by bit, we can alternate two types of steps:

  - **Measurements** to drive MBQC, operating on the live quantum information and teleporting it to a bunch of freshly-created qubits;
  - **Entangling gates** to enlarge the system on the go.

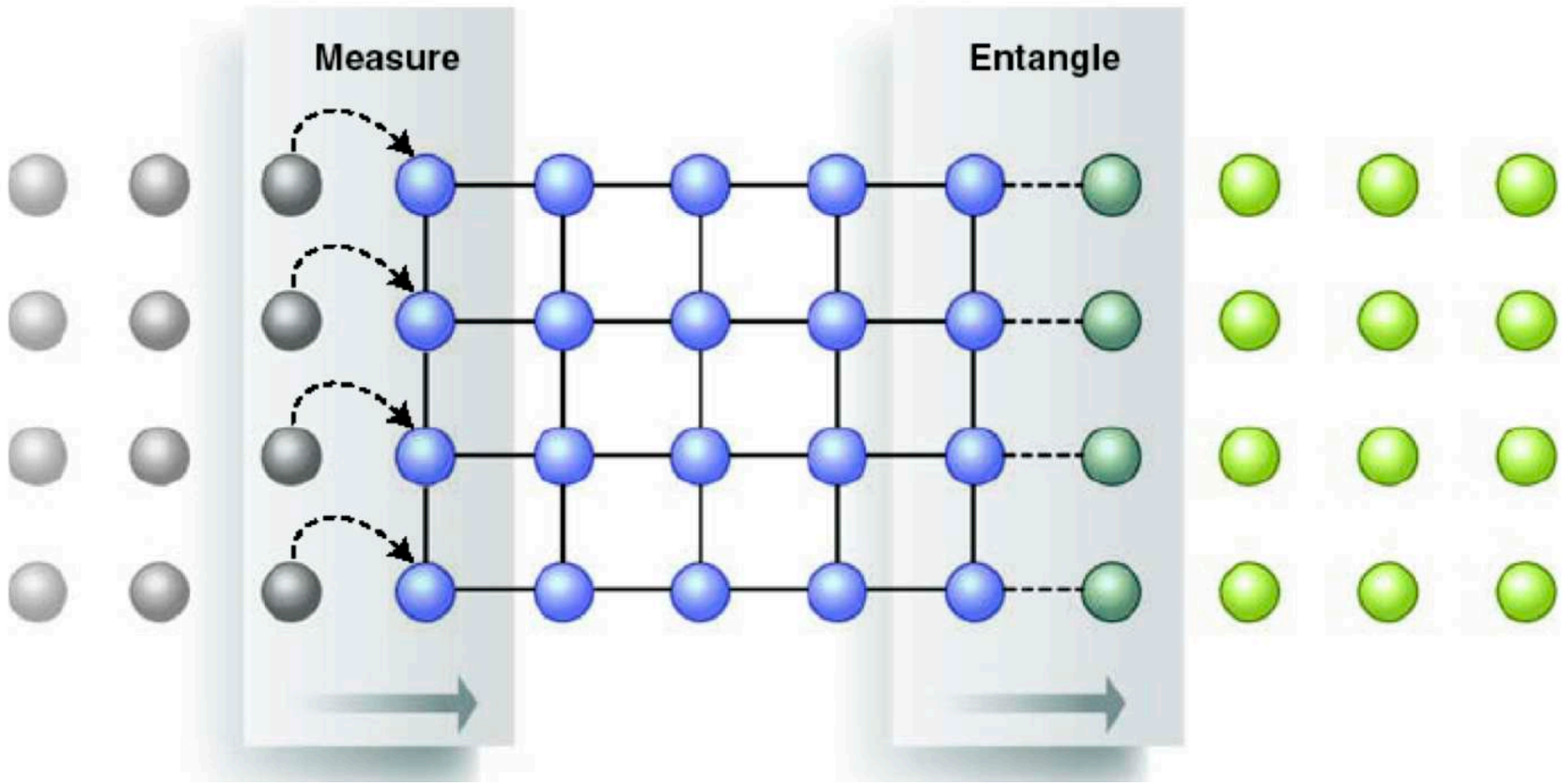

from: O'Brien, Science 318, 1467 (2007)

MBQC application: blind quantum computation

- Classical/quantum separation in MBQC allow for implementation of novel protocols – such as blind quantum computation
- Here, client has limited quantum capabilities, and uses a server to do computation for her.
- Blind = server doesn't know what's being computed.

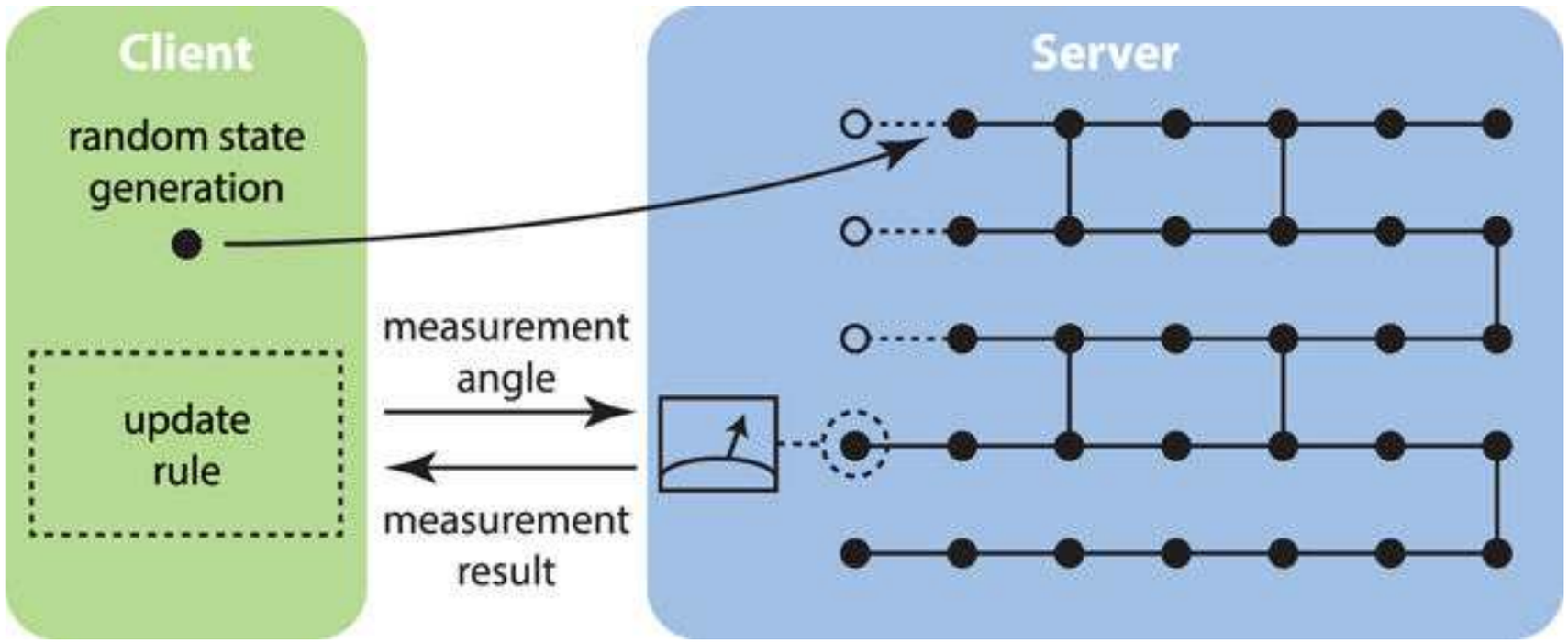

Broadbent, Fitzsimons, Kashefi, axiv:0807.4154 [quant-ph]

Adaptive quantum circuits

- Circuit model + **mid-circuit measurements** + **classical feedforward**: later gates are chosen in real time, from earlier measurement outcomes
- Adaptivity saves depth: n-qubit GHZ state with 2 CNOT layers, 1 round of measurements and 1 layer of corrections, for any n. Unitary circuits need depth ~ n (nearest-neighbour gates) or ~ log n (all-to-all)
- Here all corrections are Pauli: as in MBQC, they can be tracked classically while only Clifford gates follow. Non-Clifford steps (e.g. T gates via magic states) need real-time feedforward

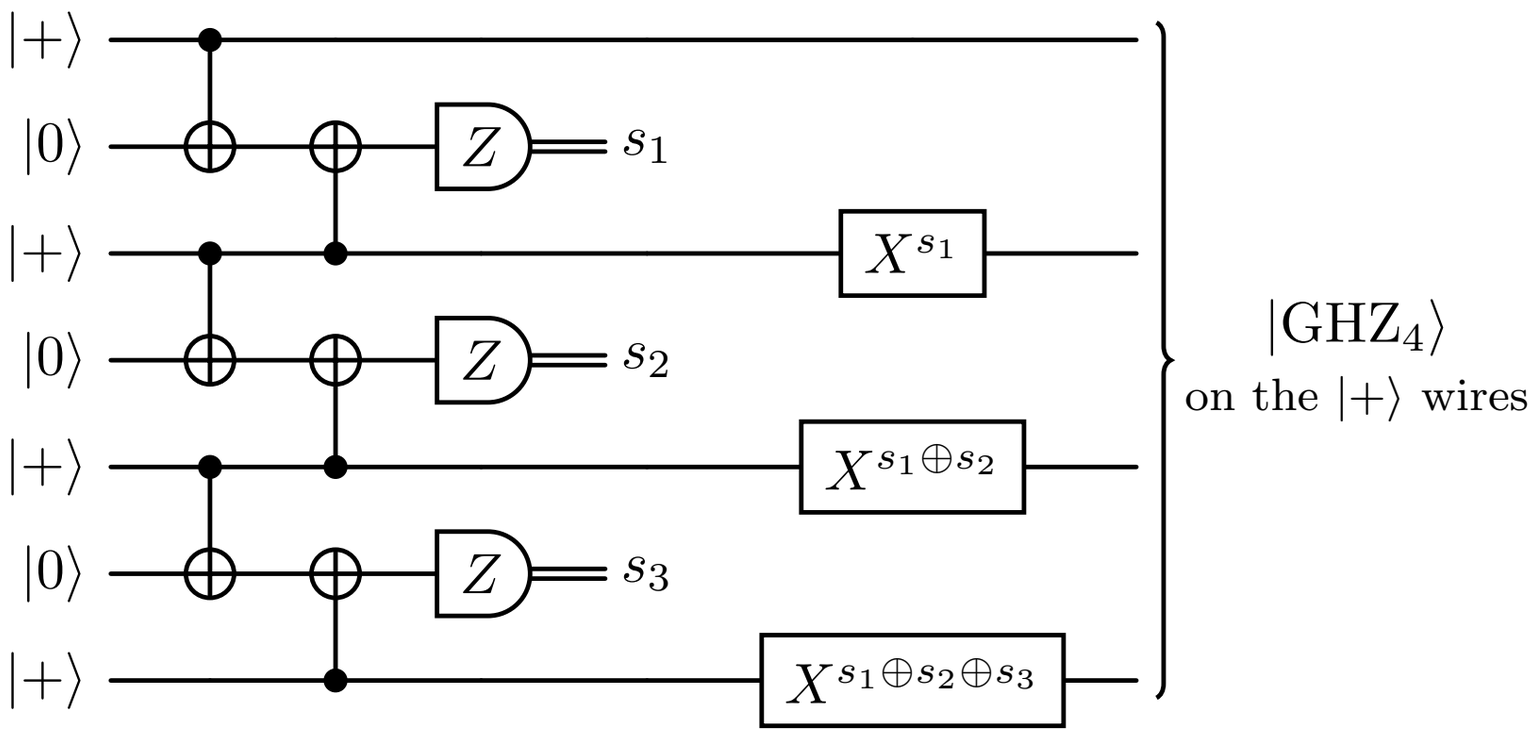

Constant-depth GHZ: Piroli, Styliaris, Cirac, PRL 127, 220503 (2021)

IBM dynamic circuits and applications

- IBM Quantum processors run **dynamic circuits**: mid-circuit measurement, reset, and gates conditioned in real time on the outcomes (OpenQASM 3; Qiskit if_test)
- Available since 2022; at utility scale (100+ qubits) since Nov. 2025; feedforward latency ≈ 0.6 μs
- **Long-range entanglement** in constant depth: GHZ states; CNOT teleported across 101 qubits
  [Bäumer et al., PRX Quantum 5, 030339 (2024)]
- **Phase estimation** with one auxiliary qubit, measured and reused each round
  [Córcoles et al., PRL 127, 100501 (2021)]
- **Error correction**: repeated syndrome measurement with reset; magic-state injection
- **Topological phases** prepared by measurement + feedforward
  [Tantivasadakarn et al., PRX Quantum 4, 020339 (2023)]
- **Simulation**: kicked Ising model on 106 qubits, 28% fewer two-qubit gates per Trotter step
  [IBM Quantum blog, Nov. 2025]

1-bit teleportation (as before), in Qiskit:

```
qc = QuantumCircuit(2, 1)
qc.h(1)                                  # |+> on qubit 1
qc.cz(0, 1)
qc.h(0); qc.measure(0, 0)                # X measurement -> m
with qc.if_test((qc.clbits[0], 1)):
    qc.x(1)                              # feedforward: X^m
qc.h(1)                                  # output: |psi>
```

Docs: quantum.cloud.ibm.com/docs/guides/classical-feedforward-and-control-flow

Linear optics, multimode interferometers, boson sampling



Fock states in multimode interferometers

- bosonic modes described by creation operators: $\left\{ a_i^\dagger \right\}$

Obeying the bosonic commutation relations:

$$[a_i, a_j^\dagger]=\delta_{ij}$$
$$[a_i, a_j]=0$$
$$a_i|0> \; = 0$$

- A state with well-defined number of photons in each mode = Fock state:

$$|S> \; = \left| s_1, s_2, \ldots, s_m > \; = \left(a_1^\dagger\right)^{s_1}\left(a_2^\dagger\right)^{s_2}\ldots\left(a_m^\dagger\right)^{s_m}\right|0>$$

- Linear optics = evolution of creation/annihilation operators by a unitary transformation:

$$(a_i^\dagger)_{\text{out}} = \sum_{j=1}^{m} U_{ij}(a_j^\dagger)_{\text{in}}$$

- Equivalently, evolution by Hamiltonians of the form:

$$H = \sum_{i,j} h_{ij}(a_i a_j^\dagger + a_j a_i^\dagger)$$

Fock states in multimode interferometers

- Physically, linear optics is what you can do by concatenating phase shifters and beam-splitters
- Here are manipulations of a **dual-rail qubit**: a single photon in two modes:

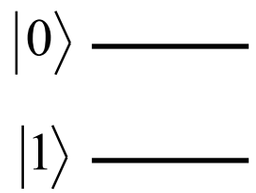

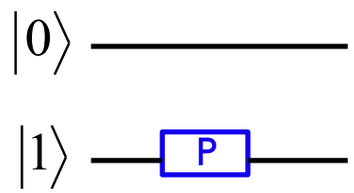

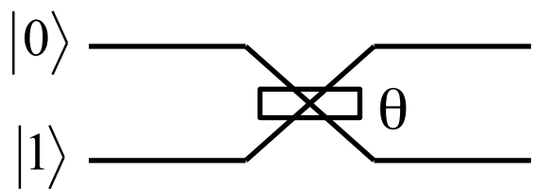

$$R(\varphi)=\begin{pmatrix}1 & 0\\ 0 & e^{i\varphi}\end{pmatrix} \qquad U(\theta)=\begin{pmatrix}\cos(\theta) & i\sin(\theta)\\ i\sin(\theta) & \cos(\theta)\end{pmatrix}$$

- Examples of dynamics:
- Example 1: Hong-Ou-Mandel effect
- Example 2: Mach-Zehnder interferometer – Elitzur-Vaidman interaction-free imaging

Hong-Ou-Mandel effect

$U = \begin{pmatrix} a & b \\ c & d \end{pmatrix}$ $\quad a_i^\dagger \to \sum_j U_{ij} a_j^\dagger$

$\Rightarrow a_1^\dagger \to a a_1^\dagger + b a_2^\dagger$

$a_2^\dagger \to c a_1^\dagger + d a_2^\dagger$

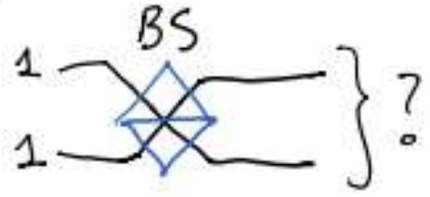

Input: $|11\rangle = a_1^\dagger a_2^\dagger |0\rangle$

$U \begin{pmatrix} a_1^\dagger \\ a_2^\dagger \end{pmatrix} = \begin{pmatrix} a a_1^\dagger + b a_2^\dagger \\ c a_1^\dagger + d a_2^\dagger \end{pmatrix}$

$a|n\rangle = \sqrt{n}|n-1\rangle$

$a^\dagger|n\rangle = \sqrt{n+1}|n+1\rangle$

So $|11\rangle \xrightarrow{BS} (a a_1^\dagger + b a_2^\dagger)(c a_1^\dagger + d a_2^\dagger)|0\rangle$

$= (ad+bc)\underbrace{a_1^\dagger a_2^\dagger |0\rangle}_{|11\rangle} + ac\underbrace{(a_1^{\dagger 2}|0\rangle)}_{\sqrt{2}|20\rangle} + bd\underbrace{|a_2^{\dagger 2}|0\rangle}_{\sqrt{2}|02\rangle}$

$= (ad+bc)|11\rangle + \sqrt{2}ac|20\rangle + \sqrt{2}bd|02\rangle$

Balanced (50/50) BS:

$U = \frac{1}{\sqrt{2}} \begin{pmatrix} 1 & i \\ i & 1 \end{pmatrix} \Rightarrow p(11) = |(ad+bc)|^2 = 0$ //

$\Rightarrow$ Photons always come out together

= HONG-OU-MANDEL effect

For general BS:

$p(11) = |(ad+bc)|^2 = |\mathrm{Per}\, U|^2$ Permanent

$\mathrm{Per}A = \sum_{\sigma \in S_m} \prod_{i=1}^{m} a_{i\sigma(i)}$ ← just like the determinant, but without minus signs

Example 1: Hong-Ou-Mandel effect

- Two identical photons simultaneously arrive at a beam splitter

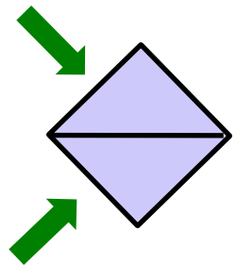

- If the beam splitter is unbalanced, we have
  - *T*= transmissivity
  - *R*=reflectivity

$$U = \begin{pmatrix} T & iR \\ iR & T \end{pmatrix}$$

- Probability that the two photons exit in different modes is

$$p = \left| Per(U) \right|^2 = \left| T^2 - R^2 \right|^2$$

Hong-Ou-Mandel effect: for balanced beam-splitter *T=R*, and *p=0*

Photons always leave the BS in the same mode:

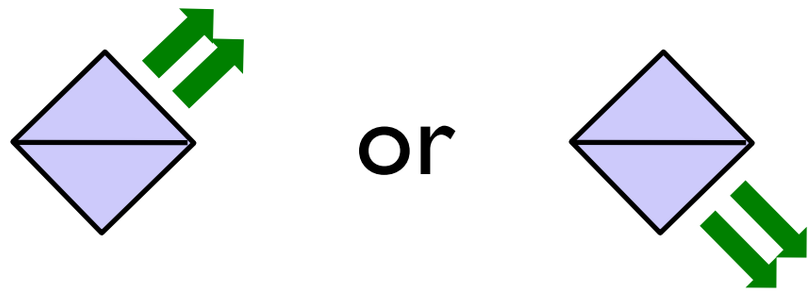

Interactive demo - interference in multimode interferometers

Quantum Flytrap

- Online simulator of interferometers with single-photon inputs

https://lab.quantumflytrap.com/lab/mach-zehnder

Visualizing Quantum Mechanics in an Interactive Simulation - Virtual Lab by Quantum Flytrap, Optical Engineering 61(8), 081808 (2022)

- We can use it to experiment with some simple interferometers:

- Mach-Zehnder interferometer

- Interaction-free detection

Example 2: the Mach-Zehnder interferometer

- Simplest two-path interferometer

- Light (single photons) enter in mode |A>=|1>, going through two balanced beam-splitters.

- Probability of photons leaving interferometer at C, D depend on the relative phase acquired by light along the two paths.

$$U(\theta)=\begin{pmatrix} \cos(\theta) & i\sin(\theta) \\ i\sin(\theta) & \cos(\theta) \end{pmatrix}$$

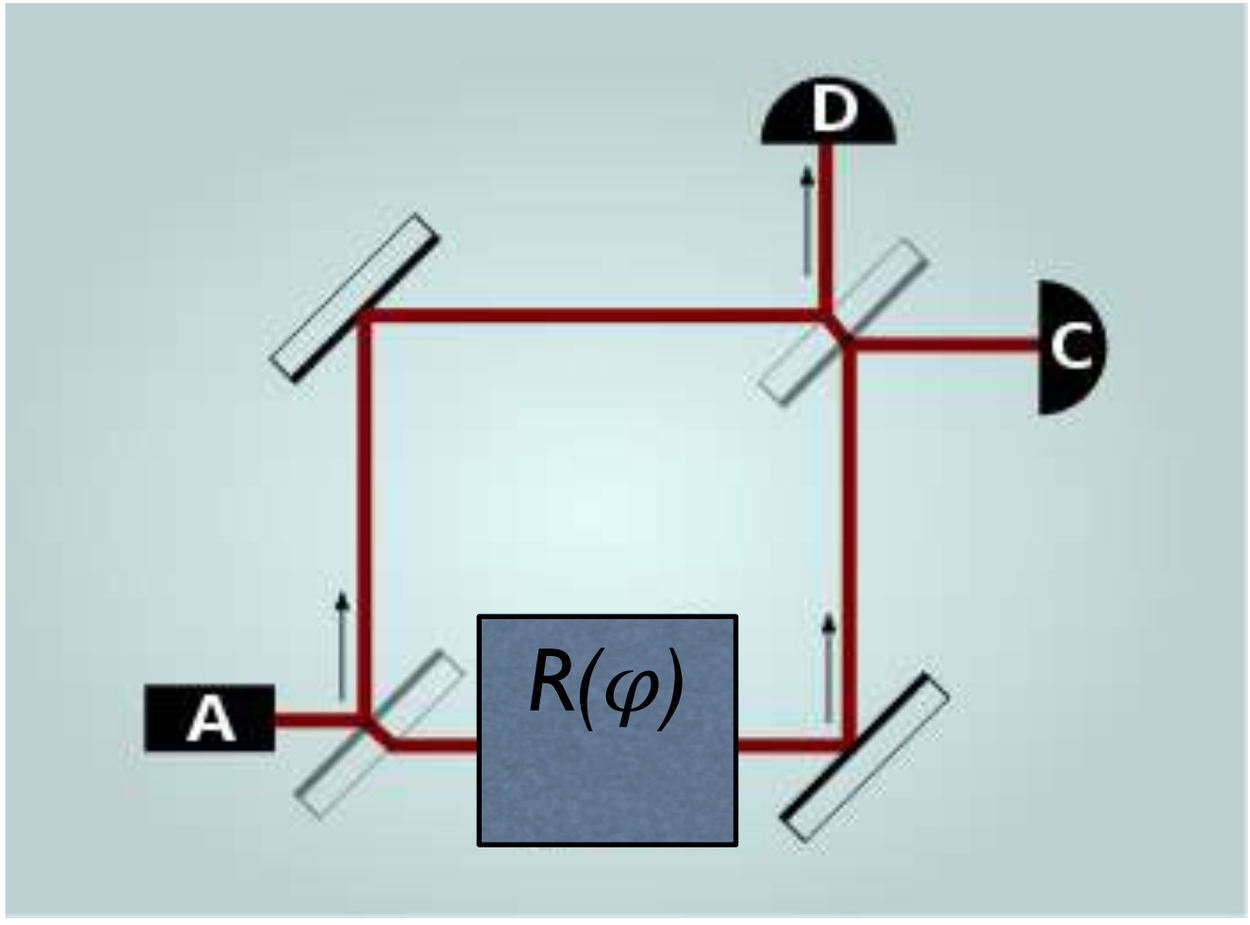

$$R(\varphi)=\begin{pmatrix} 1 & 0 \\ 0 & e^{i\varphi} \end{pmatrix}$$

- What happens if we replace the phase shifter *R(φ)* by an ultra light-sensitive bomb? Counter-intuitive bomb-testing set-up discussed by Elitzur and Vaidman in A. C. Elitzur, L. Vaidman "Quantum mechanical interaction-free measurements", *Foundations of Physics*. **23** (7): 987–997 (1993).

Example 3: Elitzur-Vaidman bomb testing

Take 2 balanced BS, forming a Mach-Zehnder interferometer (MZI). Assume we can tune the internal phase shifter so that all photons exit the interferometer at detector D. We'd like to use the MZI to check if a super-sensitive bomb, that will be triggered by absorption of a single photon, is functioning. Let's assume the BSs are balanced.

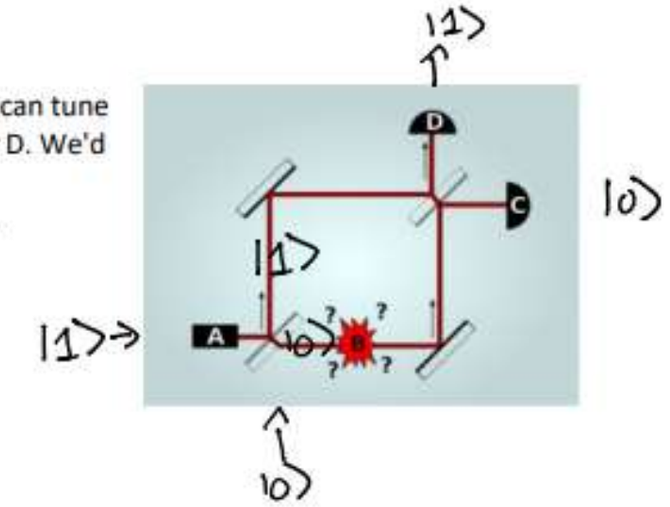

$U_{BS} = \frac{1}{\sqrt{2}}\begin{pmatrix} 1 & i \\ i & 1 \end{pmatrix}$

$U|1\rangle = \frac{1}{\sqrt{2}}\begin{pmatrix} 1 & i \\ i & 1 \end{pmatrix}\begin{pmatrix} 0 \\ 1 \end{pmatrix}$

$= \frac{1}{\sqrt{2}}\begin{pmatrix} i \\ 1 \end{pmatrix}$

2nd BS:

$U^+ \frac{1}{\sqrt{2}}(|0\rangle - i|1\rangle)$

$= \frac{1}{\sqrt{2}}(|0\rangle - i|1\rangle)$

$= |1\rangle$ ← photon always leaves the MZI at detector D, i.e. state $|1\rangle$.

If we now introduce the bomb, if the photon is absorbed it explodes.
With $p = \frac{1}{2}$, the photon will not go in the bomb's arm. Then, it will have collapsed in state $|1\rangle$, i.e. upper arm of the interferometer. Upon going through the 2nd BS, with $p = \frac{1}{2}$ it'll go to detector C.
When C clicks, we know there's a working bomb without setting it off! Efficiency $\eta = \frac{P_{detect}}{} = 1/4$

Assumption about the bomb: when it doesn't work, the photon goes through without any effect.

Fock states in multimode interferometers

- Any m-mode linear-optical transformation can be implemented by concatenating $O(m^2)$ BS and PS. More than one scheme known, for example this one by Reck *et al.*:

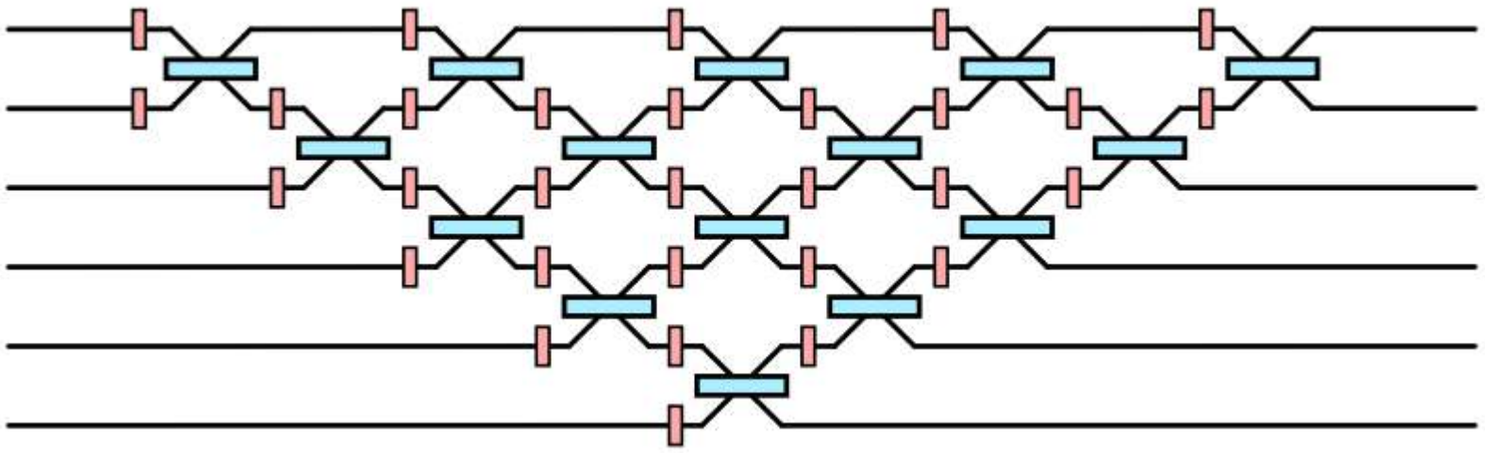

- Amplitudes for Fock-state inputs and outputs are given by permanents of matrices built out of matrix elements of *U*
- Note U is *m x m* and determines what happens with states of arbitrary number of photons – incomplete control imposes limitation to linear-optical computation

We now consider the probability of observing an output state $|T\rangle = |t_1, t_2, \ldots, t_m\rangle$. To that end, we need to define a submatrix of U, which we call $U_{S,T}$, by the following procedure. First, we take t_i identical copies of the ith column of U and construct an intermediate $m \times n$ matrix U_T. Then, we take each s_j identical copies of each jth row of U_T to obtain the $n \times n$ matrix $U_{S,T}$.

$$\Pr(S \to T) = \frac{|\mathrm{per}(U_{S,T})|^2}{\prod_i s_i! \prod_j t_j!}$$

- For a tutorial, see D. J. Brod, Revista Brasileira de Ensino de Física, vol. 43, suppl. 1, e20200403 (2021).

Example 4 - Amplitude calculation for 3-mode interferometer:

- Initial state |S>=|011>
- Final state: |T>=|200>

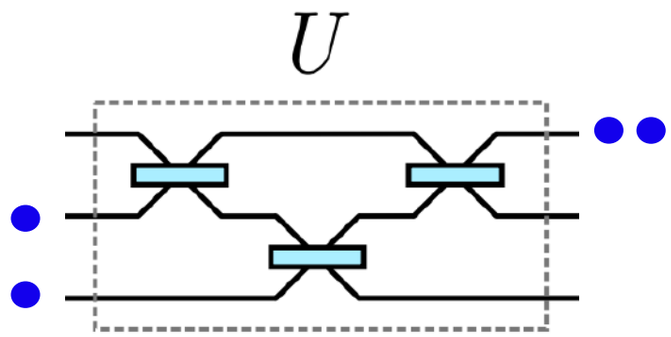

We now consider the probability of observing an output state $|T\rangle = |t_1, t_2, \ldots, t_m\rangle$. To that end, we need to define a submatrix of U, which we call $U_{S,T}$, by the following procedure. First, we take t_i identical copies of the ith column of U and construct an intermediate $m \times n$ matrix U_T. Then, we take each s_j identical copies of each jth row of U_T to obtain the $n \times n$ matrix $U_{S,T}$.

$$U = \begin{pmatrix} \alpha & \beta & \gamma \\ \delta & \epsilon & \zeta \\ \eta & \theta & \iota \end{pmatrix},$$

and suppose that $|S\rangle = |011\rangle$ and $|T\rangle = |200\rangle$. Then we obtain

$$U_T = \begin{pmatrix} \alpha & \alpha \\ \delta & \delta \\ \eta & \eta \end{pmatrix}, \text{ and } U_{S,T} = \begin{pmatrix} \delta & \delta \\ \eta & \eta \end{pmatrix}$$

- then this input/output probability is

$$P(S \to T) = \frac{1}{2!}|\text{per}(U_{S,T})|^2$$

$$= \frac{1}{2}|2\delta\eta|^2$$

A little bit about the permanent

- Definition of permanent:

$$\operatorname{perm}(A) = \sum_{\sigma \in S_n} \prod_{i=1}^{n} a_{i,\sigma(i)}.$$

- Example:

$$\operatorname{perm}\begin{pmatrix} a & b & c \\ d & e & f \\ g & h & i \end{pmatrix} = aei + bfg + cdh + ceg + bdi + afh.$$

- Unlike the determinant, for the permanent there aren't "shortcuts" to make the computation efficient
- Approximating the permanent of arbitrary real-valued matrices is **#P-complete**

#P = class of problems involving counting the number of solutions to NP problems

- For matrix with non-negative elements, however, there's an efficient algorithm to approximate the permanent with additive error [Jerrum, Sinclair, Vigoda, J. ACM 51 (4), 671 (2004)]

- From a practical point of view, permanent calculation time with *Mathematica* on laptop:

15x15 matrix	25x25 matrix	35x35 matrix
20 ms	10 s	10h

Quandela: cloud-based photonic quantum computer

- French company Quandela makes available photonic quantum computers on the cloud
- Boson sampling-type experiments (4, 5 photons) in 12-mode universal, programmable device

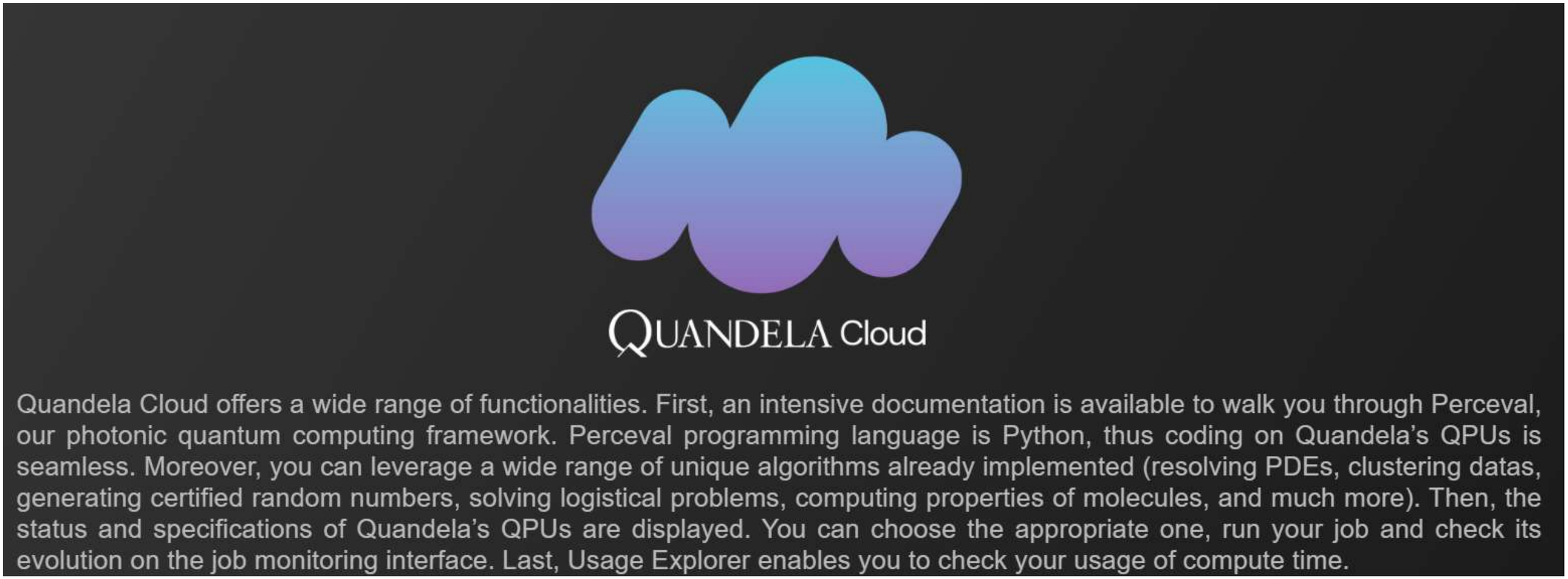

https://www.quandela.com/cloud/
https://www.quandela.com/tutorials/
https://strawberryfields.ai/photonics/demos/run_boson_sampling.html

Introduction to linear-optical quantum computation

Day	Topic
23/11 - Monday	Introduction Stabilizer formalism Measurement-based quantum computation (MBQC)
24/11 - Tuesday	Linear optics Multimode interferometers and boson sampling
25/11 - Wednesday	Boson sampling Scalable architectures for linear-optical quantum computation Simulation techniques

References: please check the course website for references and links to further material:

https://sites.google.com/id.uff.br/pqcictp/

Restricted linear-optical computer: no adaptivity

- What's the computational power of non-adaptive linear optical interferometers?

Aaronson/Arkhipov proposal (2010): Boson Sampling

- Sampling problem solved by multi-photon interference in linear interferometers
- Computational hardness is guaranteed by minimal hypotheses in computational complexity theory
- Small scale demonstrations feasible

Photonic Boson Sampling

Aaronson/Arkhipov arxiv:1011.3245

Given *mxm* random unitary *U* describing a linear interferometer, sample from the output distribution of:

1. Input of *n* indistinguishable photons;
2. Multi-photon interference in interferometer;
3. Yes/no detection at output modes.

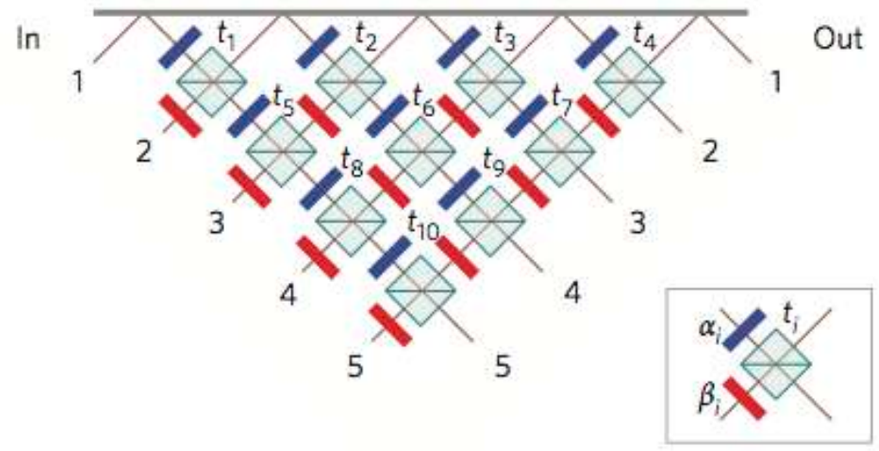

- Even **approximate weak simulation is hard** modulo reasonable hypotheses
  - permanents of matrices with Gaussian entries are hard to approximate;
  - Permanent anti-concentration conjecture [too technical]

- Technical requirements for the proof demand that $m = O(n^2)$

- This results in small fraction of bunching events = good for experimentalists

- Note that experiment doesn't calculate permanents for you – it samples from an exp(n)-large distribution of exp(n)-small probabilities

Experimental progress: first small-scale experiments (2013)

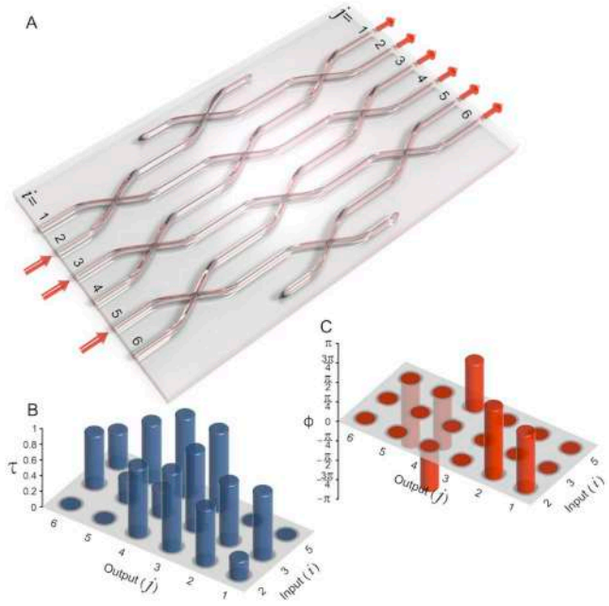

Spring et al., *Science* 339, 798 (2013) [Walmsley group]

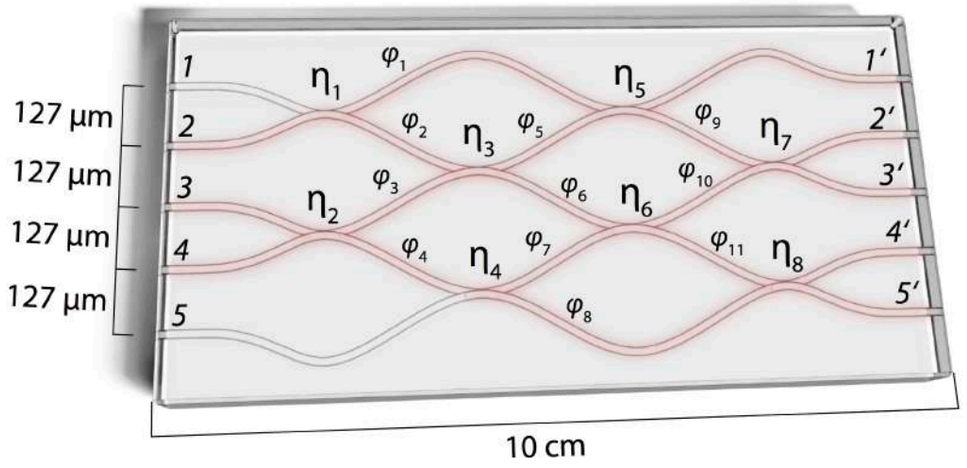

Tillmann et al, *Nat. Photon.* 7, 540 (2013) [Walther group]

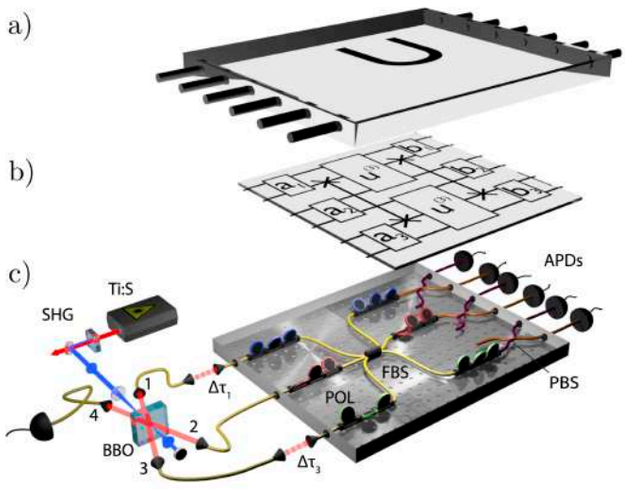

Broome et al., *Science* 339, 794 (2013) [White group]

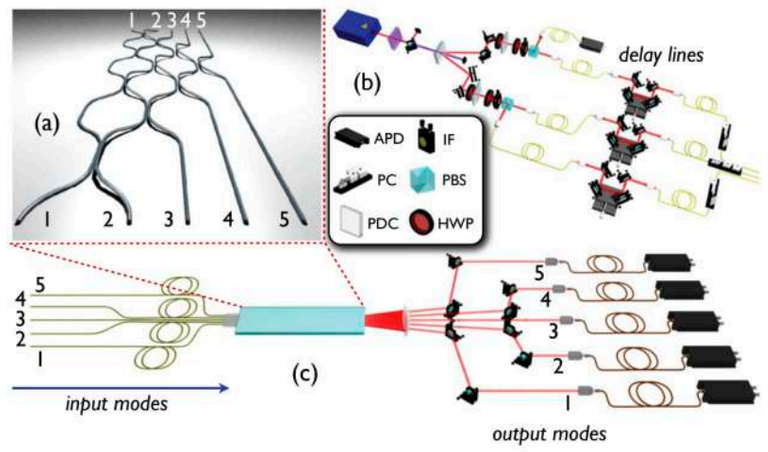

Crespi et al., *Nat. Photon.* 7, 545 (2013) [Sciarrino group]

- Interference of 3,4 photons in integrated photonic chips with 5,6 modes
- Verified that probabilities are given in terms of permanents of 3x3 matrices

Integrated multi-mode interferometers

- **Challenge**: stability of complex interferometers
- **Solution**: integrated interferometers with waveguides inscribed with lasers in glass:

  - Beam splitting by evanescent-field coupling between close waveguides
  - Phase shifs implemented by differences in path length

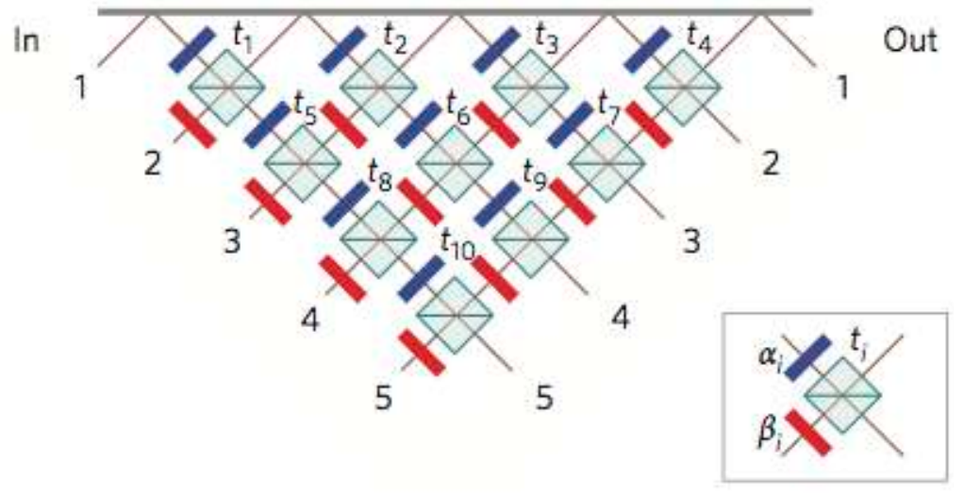

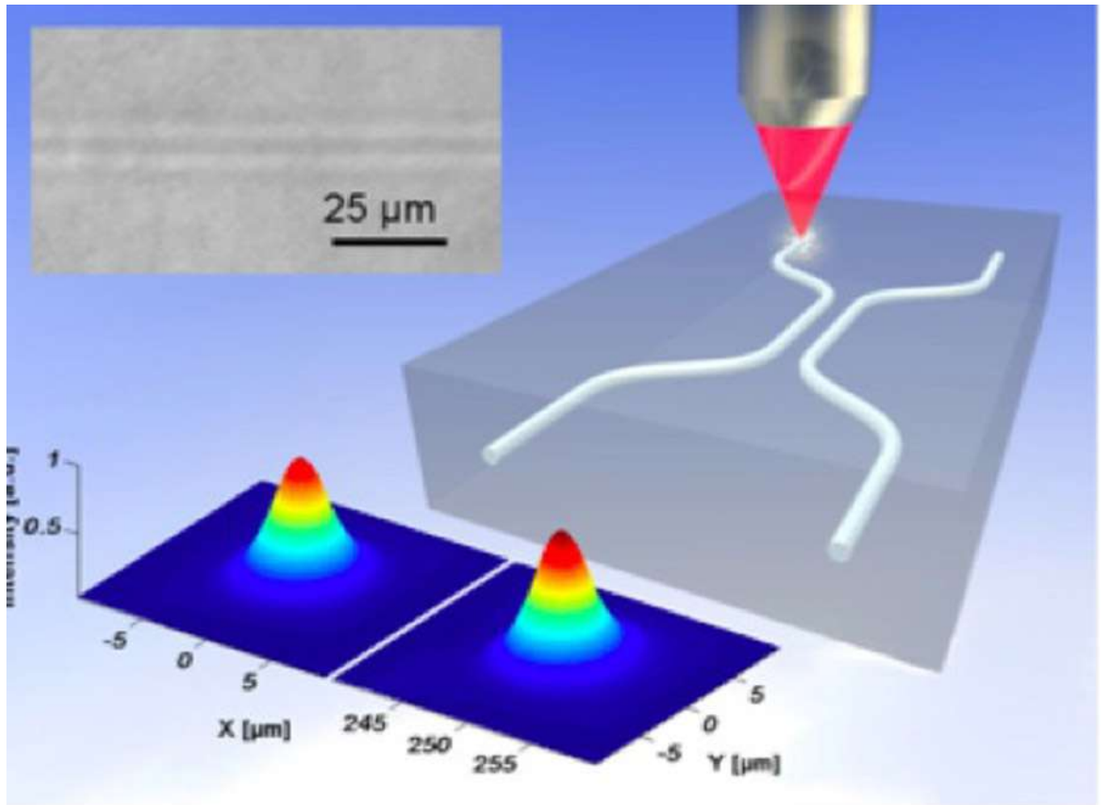

Integrated multi-mode interferometers

- **Challenge**: stability of complex interferometers
- **Solution**: integrated interferometers with waveguides inscribed with lasers in glass:

  - Beam splitting by evanescent-field coupling between close waveguides
  - Phase shifs implemented by differences in path length
  - 3D design technology

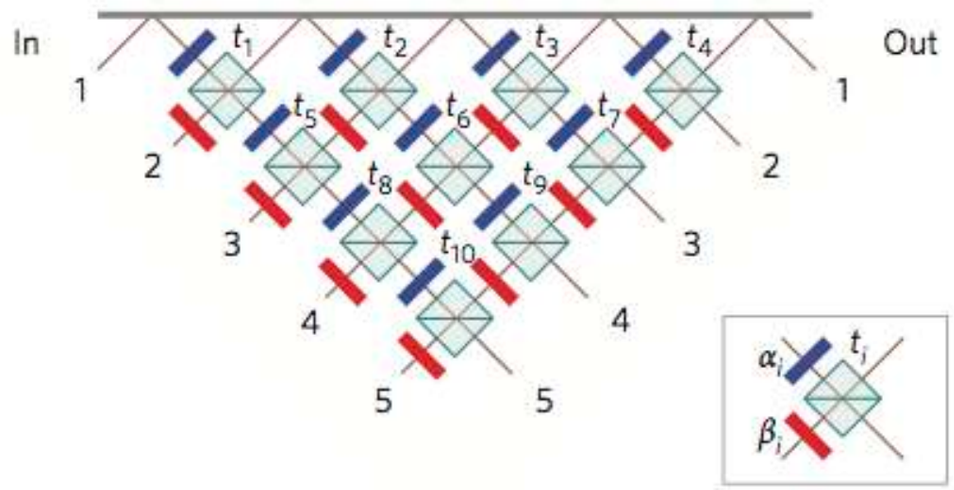

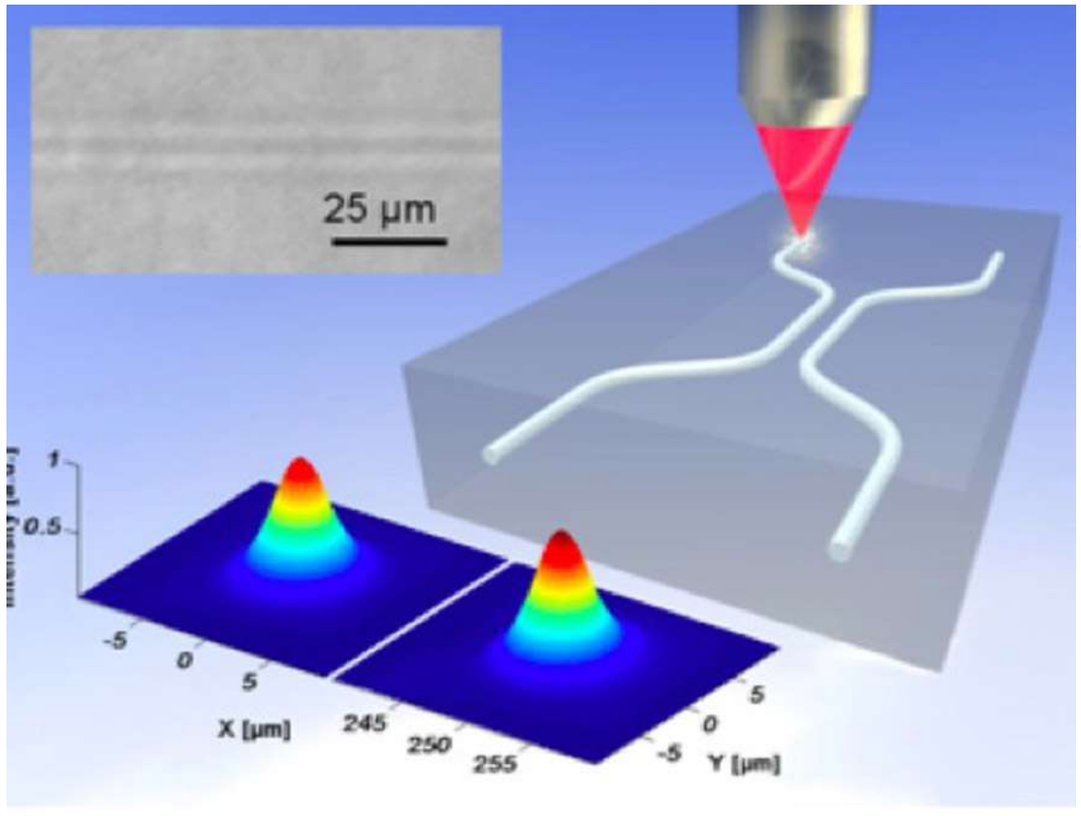

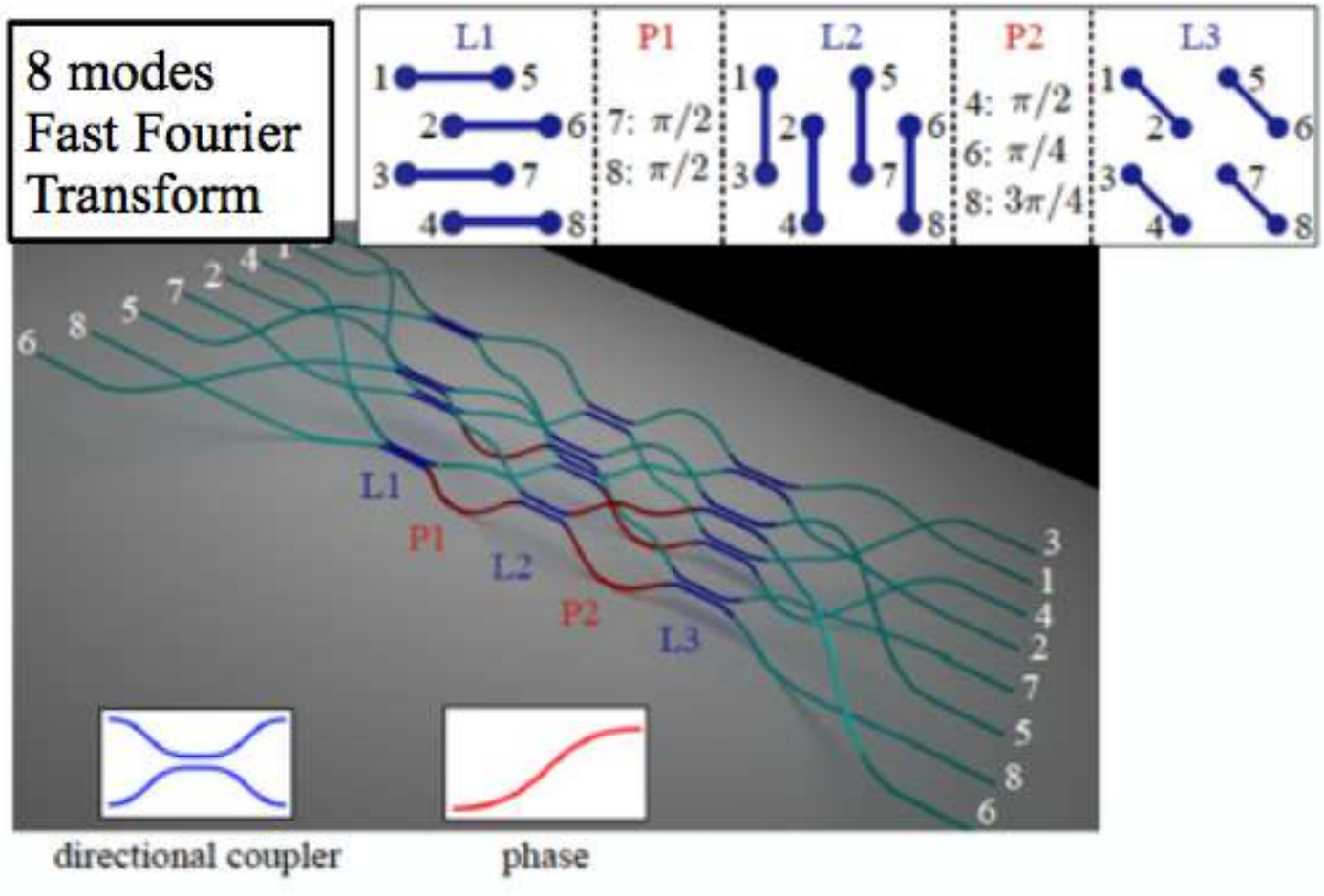

Experimental progress: reconfigurability (2015-)

Fully reconfigurable 6-mode interferometer [Carolan *et al.*, *Science* 349, 711 (2015)]

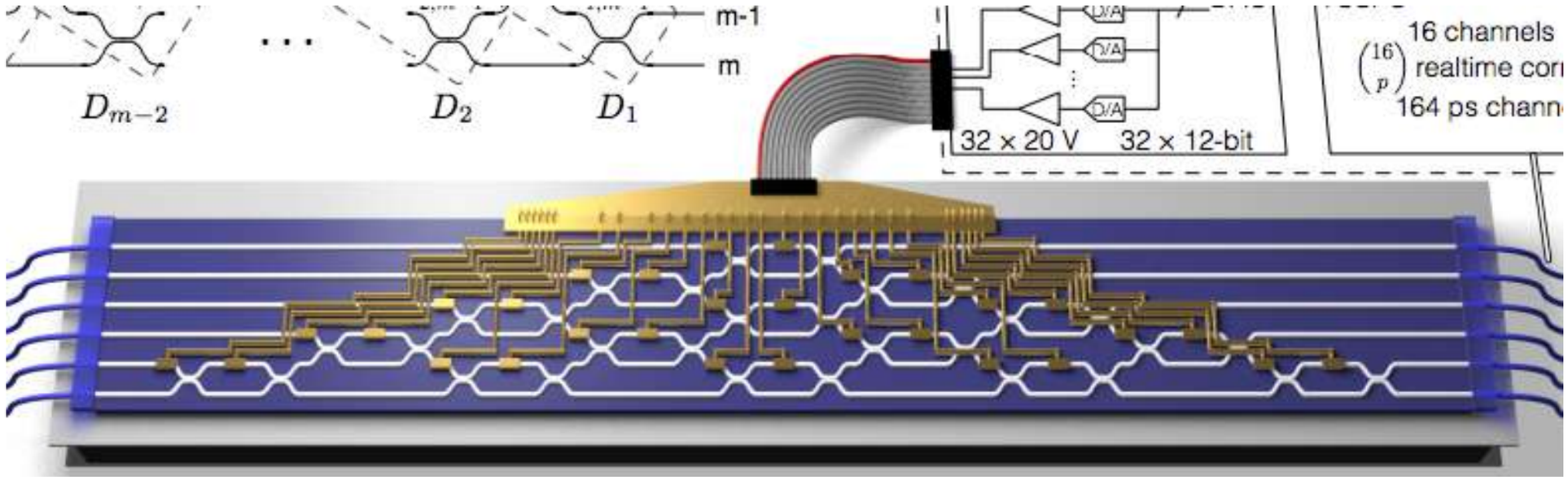

- Full reconfigurability in seconds by thermo-optic phase shifters
- 6-photon boson sampling (only 15 events)
- Automated experiments

Universal 12-mode reconfigurable chip
[Taballione et al., Materials for Quantum Technology 1 (3), 035002 (2021)]

- Silicon nitrite
- 128 tunable thermo-optic phase shifters

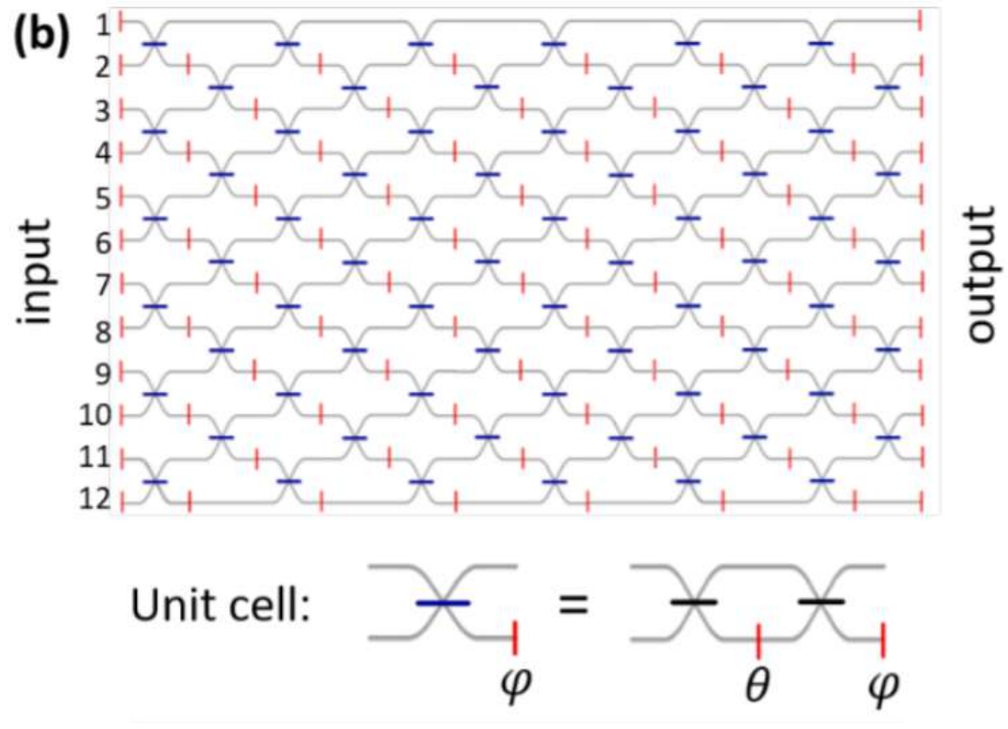

Experimental progress: current state-of-the-art (2019)

- Boson Sampling experiment at University of Science and Technology of China (Chao-Yang Lu's group) - H. Wang *et al.*, *Phys. Rev. Lett.* 123, 250503 (2019)

- quantum-dot micropillar, demultiplexed solid state source
- Up to 14 photons detected
- Still simulable on a conventional computer

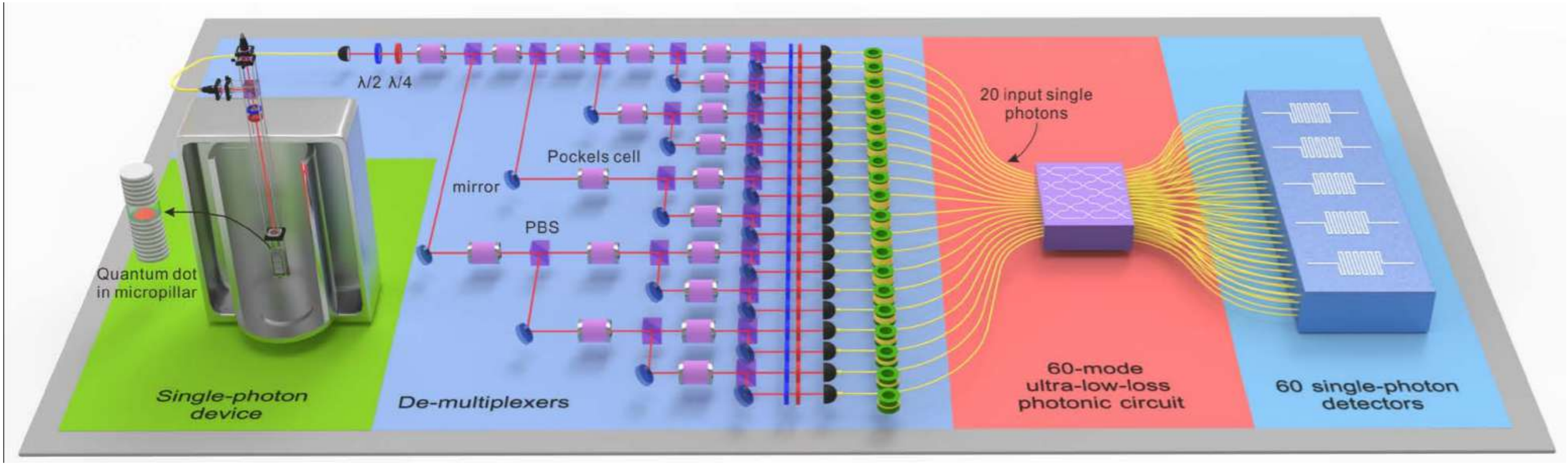

Photonic quantum advantage: Gaussian boson sampling (2020-26)

- Gaussian Boson Sampling experiments @ Univ. of Science and Technology of China (Hefei)
  - H. Wang *et al.*, Science 370 (6523), 1460 (2020).
  - Hua-Liang Liu et al., preprint arXiv:2508.09092 [quant-ph]

- GBS is a variation of boson sampling using squeezed light as inputs (higher event rate)
- Jiuzhang: up to 73 photons, 100 modes (2020)
- Jiuzhang 4.0: up to 3050 photons, 8176 modes (August 2025)
- Shanghai Jiao Tong University experiment (Sept. 2026): >11000 photons



- Open questions:
  - improved classical simulation, "faking" events using supercomputer
  - Future: higher complexity regime, encoding qubits into continuous variables for scalable computation (Gottesman-Kitaev-Preskill encoding) – approach of Canadian company Xanadu

Partial photonic indistinguishability

- We've seen that amplitudes are given by permanents of matrices with negative or complex-valued elements:

$$\Pr(S \to T) = \frac{|\mathrm{per}(U_{S,T})|^2}{\prod_i s_i! \prod_j t_j!}$$

- It can be shown that if the photons are distinguishable, i.e. have different polarizations, spectra, time-of-arrival, then the amplitude formula is changed as:

$$\Pr(S \to T) = \frac{\mathrm{per}(|U_{S,T}|^2)}{\prod_i s_i! \prod_j t_j!}$$

where $|U_{S,T}|^2$ is the matrix $U_{S,T}$ with modulus squared taken for each matrix element. This is a matrix with non-negative elements – there is an efficient algorithm for evaluating permanents such as these.

[Jerrum, Sinclair, Vigoda, *J. ACM* 51 (4), 671 (2004)]

- The output of **partially distinguishable** multi-photon experiments is affected by the spectral functions describing internal degrees of freedom of the photons

- Outcomes depend only on Bargmann invariants:

$$\Delta_{ABC\cdots K} = \langle A|B\rangle \langle B|C\rangle \langle C|D\rangle \cdots \langle K|A\rangle$$

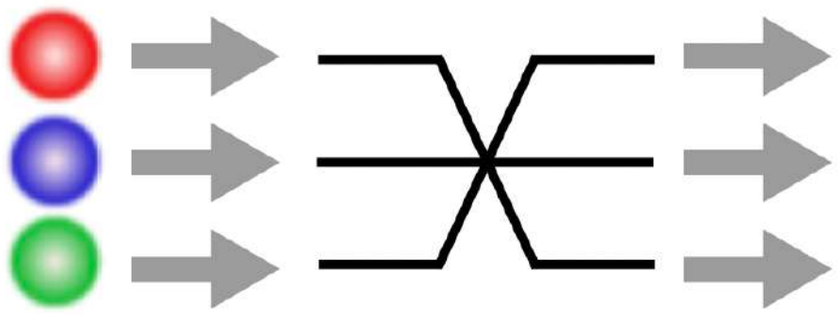

[Rodari *et al.*, *PRX Quantum* 6, 020340 (2025)]
[Oszmaniec, Brod, Galvão, *New J. Phys.* 26 013053 (2024)]

Bargmann invariants to describe partial multiphoton indistinguishability

- **Hong-Ou-Mandel effect** - overlap of the spectral functions of internal degrees of freedom of two photons determines the probability they'll bunch after a 50/50 beam splitter:

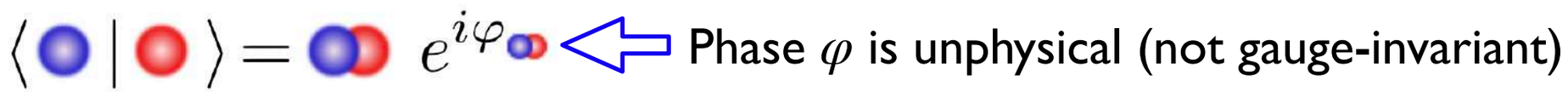



- Bargmann invariants of the spectral function rule **multi photon experiments**:

$$\Delta_{ABC\cdots K} = \langle A|B\rangle\langle B|C\rangle\langle C|D\rangle\cdots\langle K|A\rangle$$

- The output of any linear-optical interferometer depends only on the Bargmann invariants of the input photons' spectral functions - overlaps *and* Bargmann phases

Example: d=3 QFT

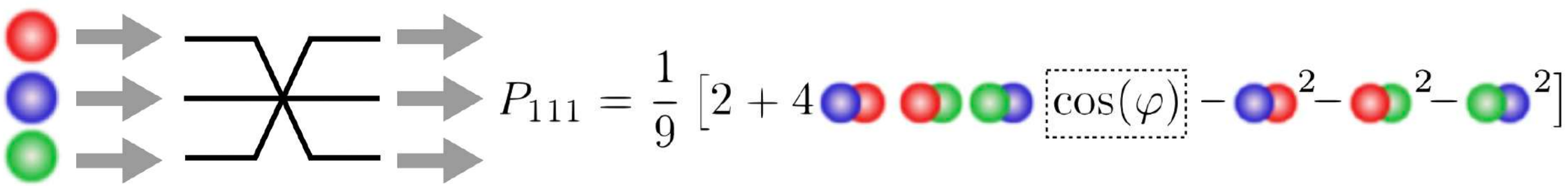

[from A. J. Menssen *et al.*, *PRL* 118, 153603 (2017)]

- For more on this: come to the IFT-ICTP-SAIFR Colloquium later today (Nov. 25th)

Purity/indistinguishability distillation for identical mixed inputs

- Input of n photons, measure some, **distill** fewer, more indistinguishable photons
- Intuition might suggest it's impossible, but mixed-state, post selected outcomes enable this
- This is a photonic purification scheme, equivalent to well-studied qubit versions

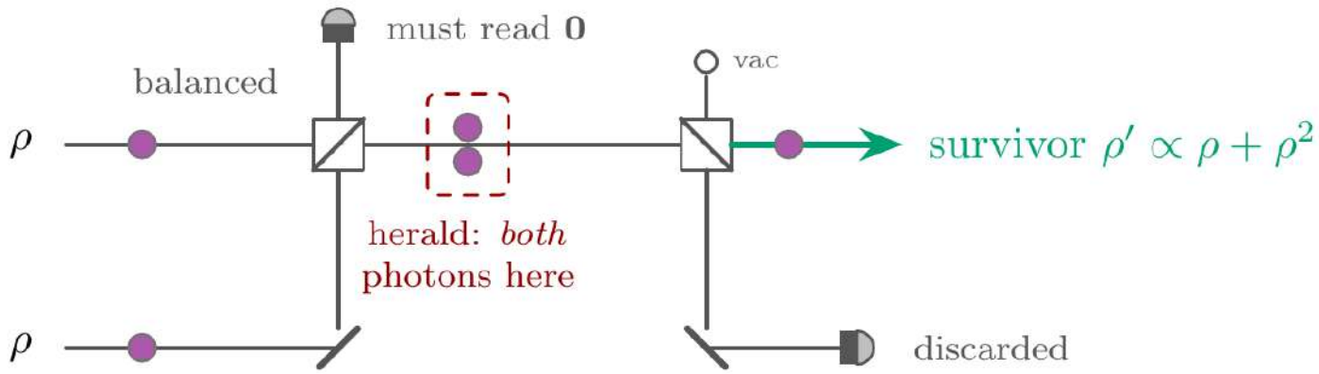

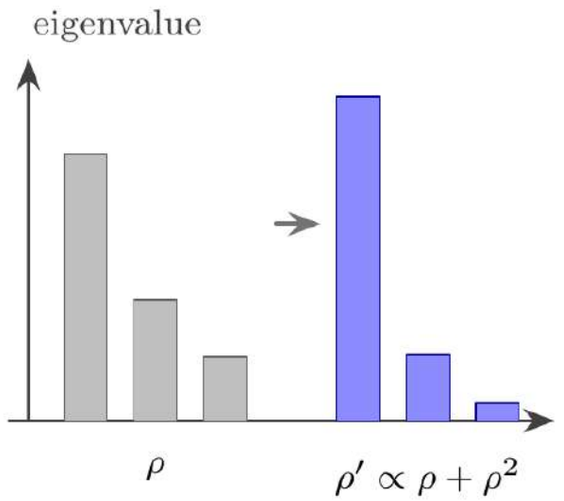

$$\rho'_{2+1} \propto \mathrm{Tr}_2\left[\Pi_{\mathrm{sym}}\,(\rho\otimes\rho)\,\Pi_{\mathrm{sym}}\right] \propto \rho+\rho^2, \qquad \Pi_{\mathrm{sym}} = \tfrac{1}{2}(\mathbb{1}+\mathrm{SWAP})$$

That herald projects the pair onto Sym^2. Split the pair, discard one photon — a partial trace — and the survivor is $\rho' \propto \rho + \rho^2$. This is **distillation of both purity and indistinguishability**.

[C. Sparrow, Ph.D. thesis, Imperial College London (2018); J. Marshall, Physical Review Letters 129, 213601 (2022)]

Improved distillation via unitary invariant characterisation

Optimal distillation of photonic indistinguishability. Hoch et al., arXiv:2509.02296

Three photons in arbitrary pure internal states.

Two interfere in an interferometer U_D. Goal: maximize indistinguishability with 3rd.

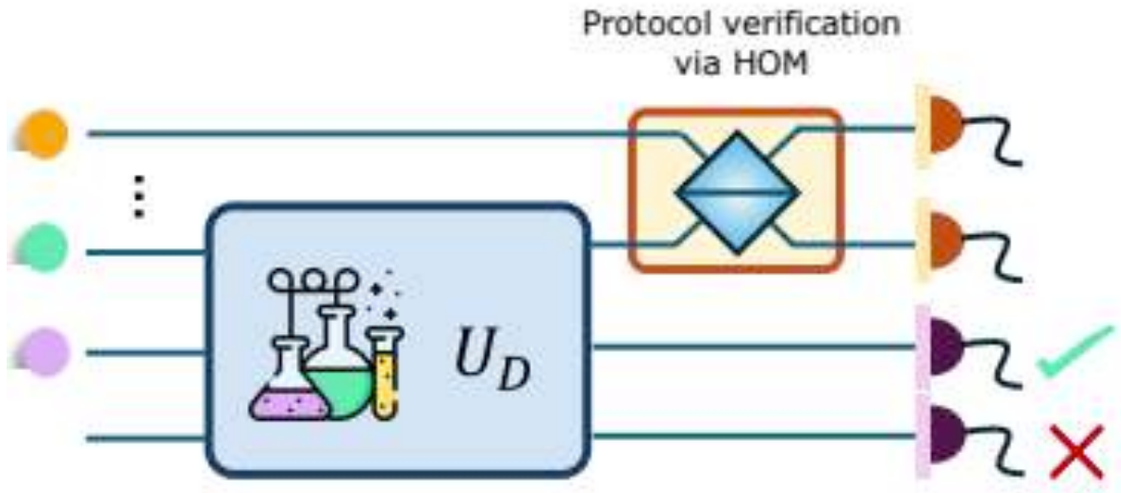

Optimisation in 3 steps:

1 - Characterise unitary invariants of 3-photon source: 3 overlaps, one 3rd-order Bargmann phase. (This can be done blindly.)

2- Optimize for visibility of distilled photon with third photon.

3- Now optimize for rate, without sacrificing the fidelity.

— **The optimum depends on the collective phase**, not only on the pairwise visibilities. The triad phase is not a curiosity — it is a design parameter.

— Indistinguishability distillation may be different from purity distillation

Photonic fusion gates
Scalable architectures for photonic QC
Classical simulation techniques

What else do we need for universal photonic quantum computation?

KLM scheme: two-qubit gates with high success probability in 2 steps:

1- probabilistic two-qubit CZ gate;

2- scheme using off-line preparation of photonic entangled states to increase success rate to acceptable levels

[Knill, Laflamme, Milburn, *Nature*. **409** (6816)]

CZ =

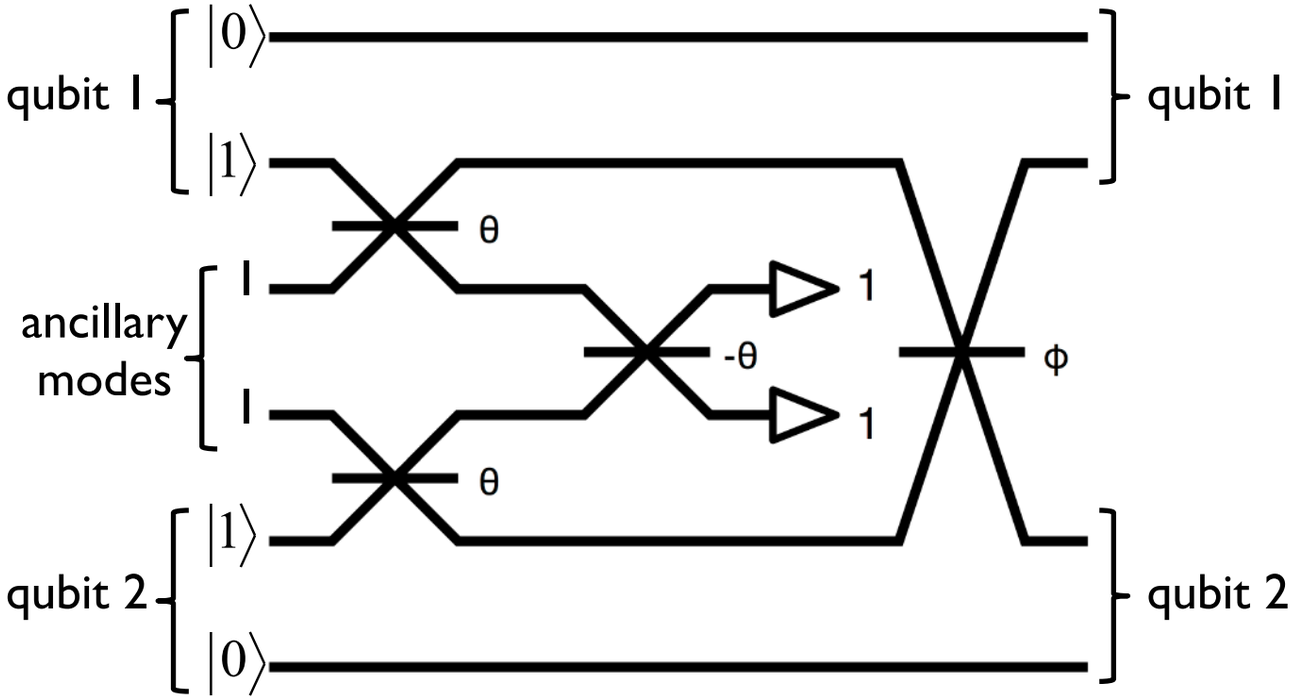

Optimal success rate:

$$\left.\begin{aligned}\theta &= 54.74^\circ \\ \phi &= 17.63^\circ\end{aligned}\right\} \Rightarrow p = 2/27$$

- The resources required are unpractical. Note the **similarities with MBQC**: creation of entangled states, measurements and adaptivity…
- More resource-efficient MBQC ideas involve probabilistic cluster-state growth, then adaptive measurement, as suggested by Browne and Rudolph, PRL 95, 010501 (2005).

Recalling: fusion gates are Bell state measurements

- Start with small, constant-size graph states
- Use **fusion measurements** to connect small states into larger states probabilistically
  (see S. Bartolucci et al, arXiv 2101.09310 [quant-ph])

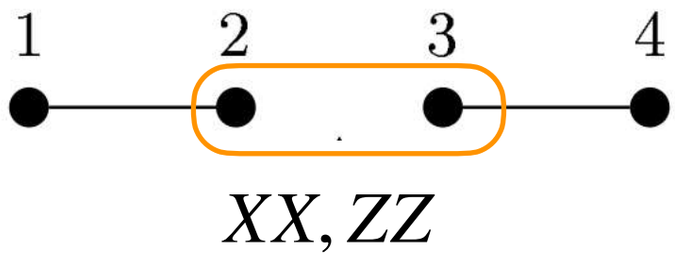

- Use error-correcting techniques to deal with unsuccessful fusions

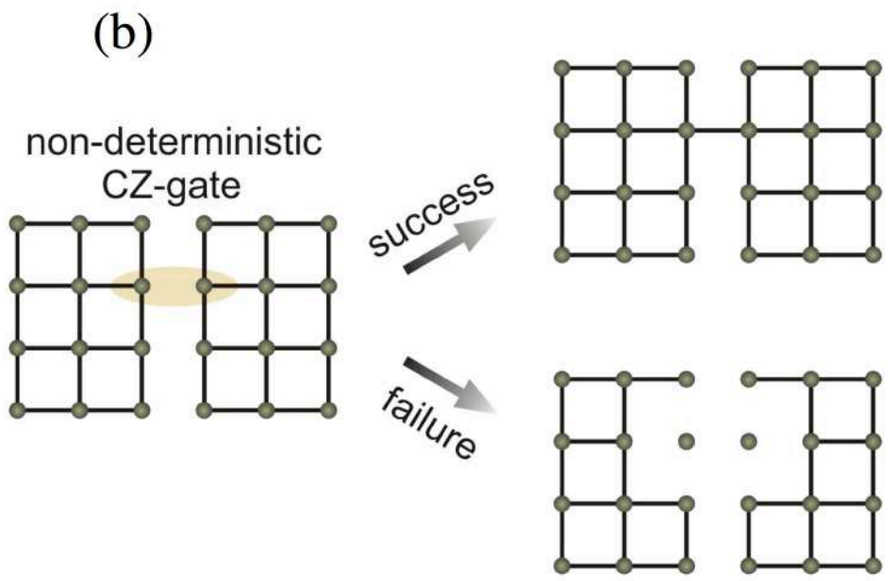

from: Briegel *et al.*, *Nat. Phys.* 5 (1), 19 (2009)

MBQC - implementations

- Schemes for adapting imperfect clusters for MBQC

(a) initial faulty square lattice

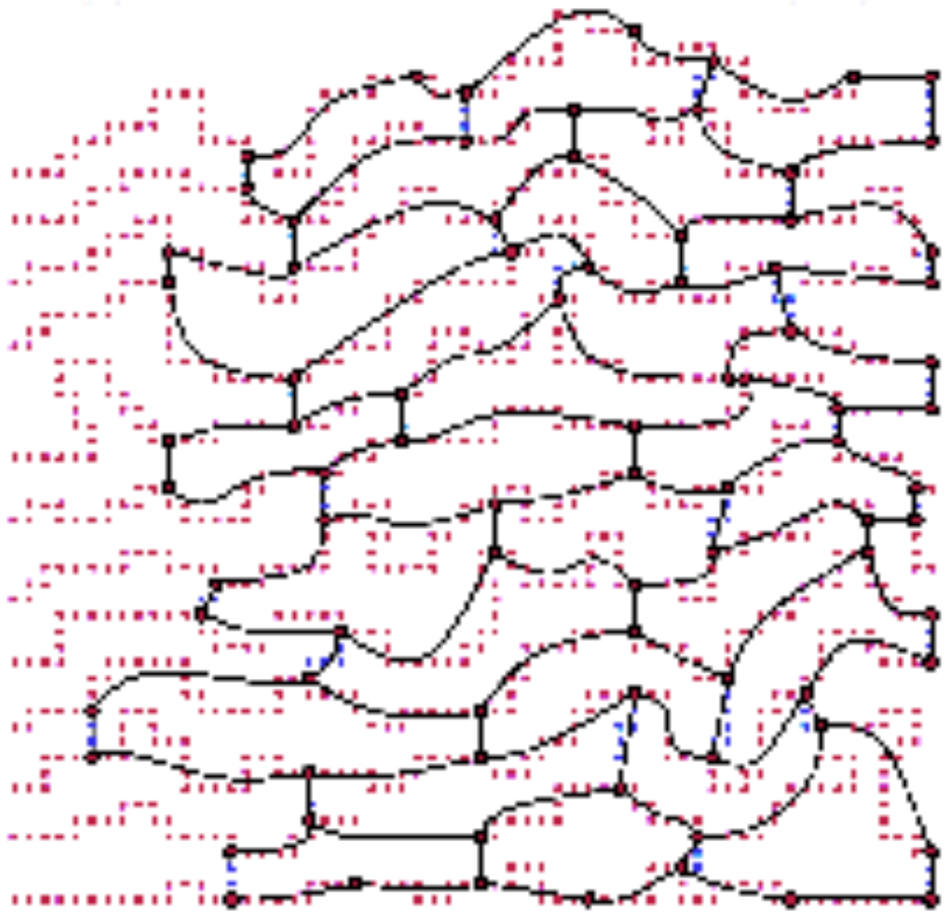

(f) deletion and contraction (Q.1 & Q.2)

from: Browne *et al.*, *New J. Phys.* 10, 023010 (2008)

Fault-tolerance via check operators

- We can choose measurements with redundancy, so that some errors can be detected, and accounted for.
- Example from S. Bartolucci et al, arXiv 2101.09310 [quant-ph]

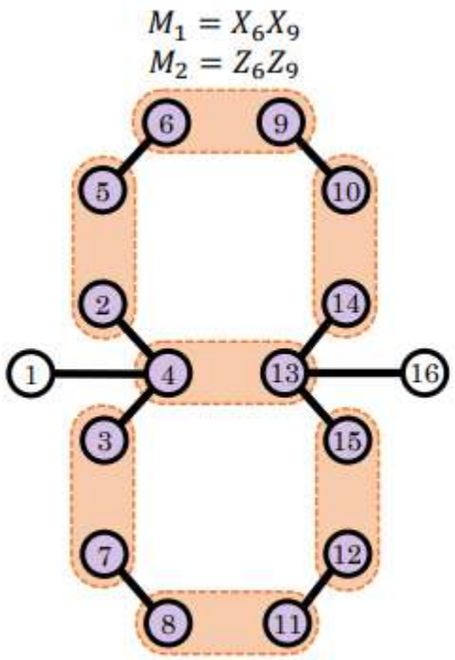

(a) Fusion network

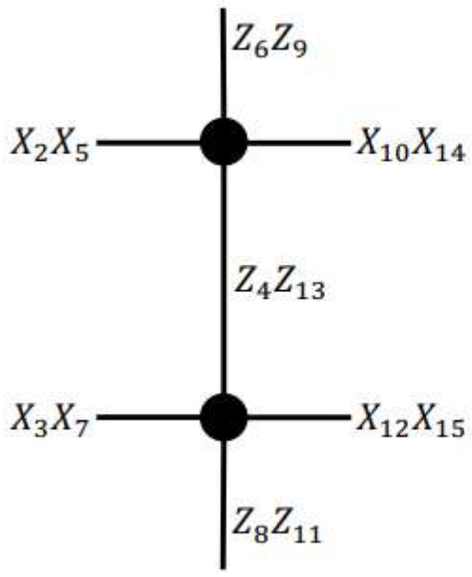

(b) Syndrome graph

Resource States, R	$\left\langle \begin{pmatrix} X_1Z_4, \\ X_2Z_4, \\ X_3Z_4, \\ X_4Z_1Z_2Z_3, \end{pmatrix}, \begin{pmatrix} X_{14}Z_{13}, \\ X_{15}Z_{13}, \\ X_{16}Z_{13}, \\ X_{13}Z_{14}Z_{15}Z_{16} \end{pmatrix}, \begin{pmatrix} X_5Z_6, \\ X_6Z_5 \end{pmatrix}, \begin{pmatrix} X_7Z_8, \\ X_8Z_7 \end{pmatrix}, \begin{pmatrix} X_9Z_{10}, \\ X_{10}Z_9 \end{pmatrix}, \begin{pmatrix} X_{11}Z_{12}, \\ X_{12}Z_{11} \end{pmatrix} \right\rangle$
Fusion, F	$\left\langle \begin{pmatrix} X_2X_5, \\ Z_2Z_5 \end{pmatrix}, \begin{pmatrix} X_3X_7, \\ Z_3Z_7 \end{pmatrix}, \begin{pmatrix} X_6X_9, \\ Z_6Z_9 \end{pmatrix}, \begin{pmatrix} X_8X_{11}, \\ Z_8Z_{11} \end{pmatrix}, \begin{pmatrix} X_4X_{13}, \\ Z_4Z_{13} \end{pmatrix}, \begin{pmatrix} X_{10}X_{14}, \\ Z_{10}Z_{14}, \end{pmatrix}, \begin{pmatrix} X_{12}X_{15}, \\ Z_{12}Z_{15}, \end{pmatrix}, -\mathbf{1} \right\rangle$
Checks, C	$\langle X_2X_5Z_6Z_9X_{10}X_{14}Z_{13}Z_4, \ X_3X_7Z_8Z_{11}X_{12}X_{15}Z_{13}Z_4 \rangle$
Surviving Stabilizer, S	$\langle \mathrm{C}, X_1(Z_4Z_{13})X_{16}, Z_1(Z_2Z_5)(X_6X_9)(Z_{10}Z_{14})(Z_{12}Z_{15})(X_8X_{11})(Z_3Z_7)(Z_4Z_{13})Z_{16} \rangle$

(c) Stabilizer group in the fusion network

$$S_{\text{out}} = \langle m^{ZZ}_{4,13} X_1 X_{16}, \quad (16)$$
$$m^{XX}_{4,13} m^{ZZ}_{2,5} m^{XX}_{6,9} m^{ZZ}_{10,14} m^{XX}_{12,15} m^{XX}_{8,11} m^{XX}_{3,7} Z_1 Z_{16} \rangle$$

- Suppose measurement error in Z_4 Z_{13}, flipping the sign of the first output stabilizer. This appears in both check operators – reasonable chance of being detected.
- Not all errors detectable

Implementing fusion gates in linear optics

- Different schemes for polarization, time-bin, dual-rail encoding
- Here we'll have a look at some possibilities for dual-rail encoding

- A fusion gate can be implemented by a Bell measurement, i.e. a measurement that discriminates the 4 Bell basis states, simultaneously measuring XX, ZZ:

$$|\Psi_\pm\rangle = \frac{1}{\sqrt{2}}\left(|01\rangle \pm |10\rangle\right)$$

$$|\Phi_\pm\rangle = \frac{1}{\sqrt{2}}\left(|00\rangle \pm |11\rangle\right)$$

- Let's use 2 balanced BSs:

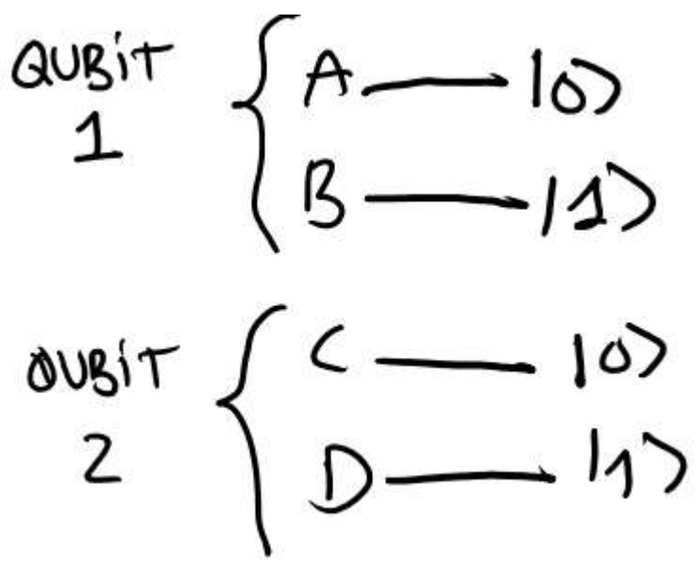

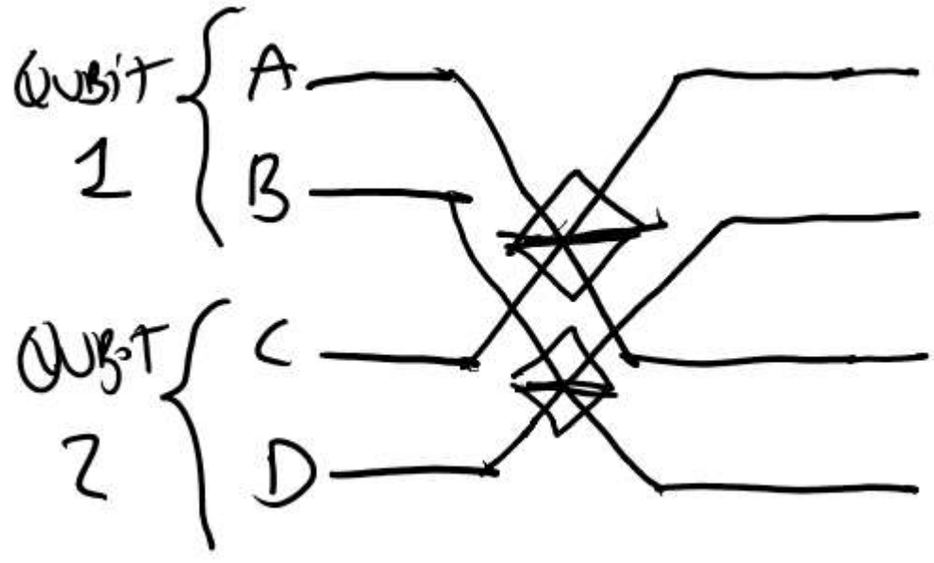

Bell measurement with linear optics - I

We want to perform a Bell-basis measurement on dual rail qubits. These are the four Bell basis states, with their equivalent dual-rail encodings:

$$|\Psi_\pm\rangle = \frac{1}{\sqrt{2}}\left(|01\rangle \pm |10\rangle\right)$$

QUBIT 1 { A — $|0\rangle$; B — $|1\rangle$

$$|\phi_\pm\rangle = \frac{1}{\sqrt{2}}\left(|00\rangle \pm |11\rangle\right)$$

QUBIT 2 { C — $|0\rangle$; D — $|1\rangle$

$$|\Psi_+\rangle = \frac{1}{\sqrt{2}}\left[|1_A 0_B 0_C 1_D\rangle + |0_A 1_B 1_C 0_D\rangle\right]$$

We'll use 2 balanced BS's, { one on modes A, C ; one on modes B, D

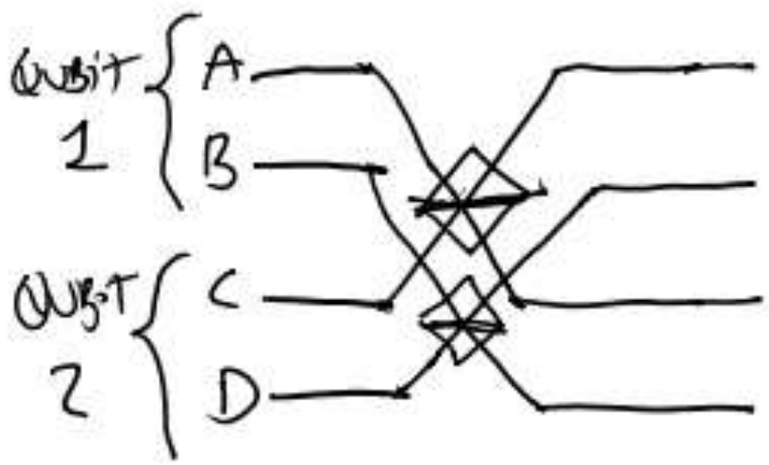

$$U_{BS} = \frac{1}{\sqrt{2}}\begin{pmatrix} 1 & i \\ i & 1 \end{pmatrix}$$

Bell measurement with linear optics - 2

$a_A^+ \to \frac{1}{\sqrt{2}}(a_A^+ + i a_C^+)$

$a_C^+ \to \frac{1}{\sqrt{2}}(i a_A^+ + a_C^+)$

$a_B^+ \to \frac{1}{\sqrt{2}}(a_B^+ + i a_D^+)$

$a_D^+ \to \frac{1}{\sqrt{2}}(i a_B^+ + a_D^+)$

Let's see how $|\Psi_+\rangle$ gets transformed by the 2 BS's. First, write initial state $|\Psi_+\rangle$ in terms of creation operators:

$$|\Psi_+\rangle = \frac{1}{\sqrt{2}}\left[|1001\rangle + |0110\rangle\right]$$

$$= \frac{1}{\sqrt{2}}\left(a_A^+ a_D^+ + a_B^+ a_C^+\right)|0000\rangle$$

$$\to \frac{1}{2\sqrt{2}}\left[\left(a_A^+ + i a_C^+\right)\left(i a_B^+ + a_D^+\right) + \left(a_B^+ + i a_D^+\right)\left(i a_A^+ + a_C^+\right)\right]|0000\rangle$$

$$= \frac{1}{2\sqrt{2}}\left[i a_A^+ a_B^+ + a_A^+ a_D^+ - a_B^+ a_C^+ + i a_C^+ a_D^+ + i a_A^+ a_B^+ + a_B^+ a_C^+ - a_A^+ a_D^+ + i a_C^+ a_D^+\right]|0000\rangle$$

$$= \frac{2i}{2\sqrt{2}}\left[a_A^+ a_B^+ + a_C^+ a_D^+\right]|0000\rangle$$

$$= \frac{1}{\sqrt{2}}\left[|1100\rangle + |0011\rangle\right]$$

Implementing fusion gates in linear optics

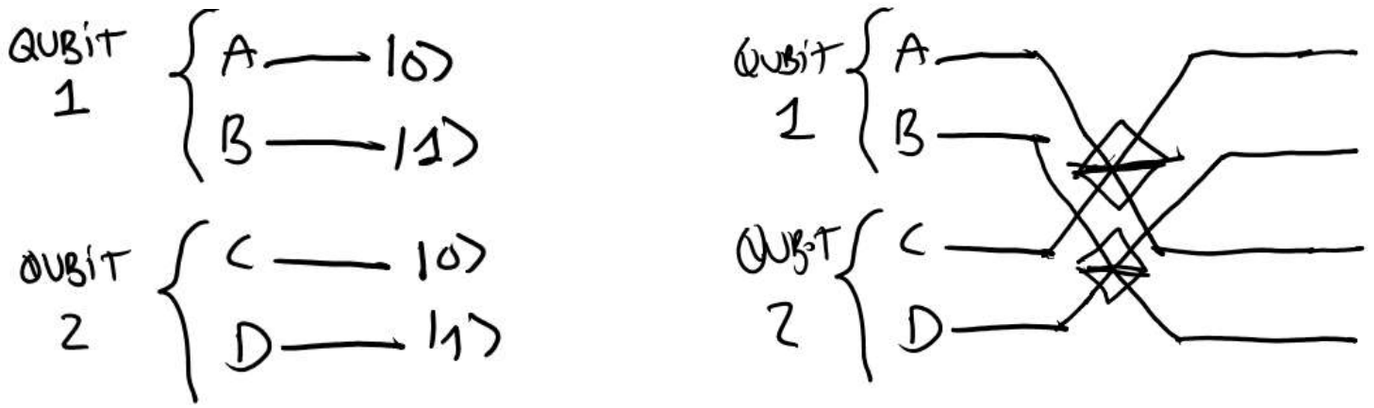

$|\Psi_+\rangle \rightarrow \frac{1}{\sqrt{2}}\left[|1100\rangle + |0011\rangle\right]$ ← Done in class

$|\Psi_-\rangle \rightarrow \frac{1}{\sqrt{2}}\left[|1001\rangle - |0110\rangle\right]$

$|\Phi_\pm\rangle \rightarrow \frac{1}{\sqrt{2}}\left[|2000\rangle + |0020\rangle \pm |0200\rangle \pm |0002\rangle\right]$

} Exercise

- With photo-detectors at the output, we can perfectly discriminate psi+, psi- against the others: 50% efficiency

- This is a 50% efficiency fusion gate – proposed in 2004 by Browne and Rudolph, using polarization instead.

D. Browne, T. Rudolph, *Physical Review Letters* 95, 010501 (2005)

Implementing fusion gates in linear optics

F. Ewert and P. van Loock, PRL 113, 140403 (2014)

- Improving the efficiency of linear-optical Bell measurements: 75% and above

3/4-efficient Bell measurement with passive linear optics and unentangled ancillae

Fabian Ewert* and Peter van Loock
Institute of Physics, Johannes-Gutenberg Universität Mainz, Staudingerweg 7, 55128 Mainz, Germany
(Dated: March 20, 2014)

It is well known that an unambiguous discrimination of the four optically encoded Bell states is possible with a probability of 50% at best, when using static, passive linear optics and arbitrarily many vacuum mode ancillae. By adding unentangled single-photon ancillae, we are able to surpass this limit and reach a success probability of at least 75%. We discuss the error robustness of the proposed scheme and a generalization to reach a success probability arbitrarily close to 100%.

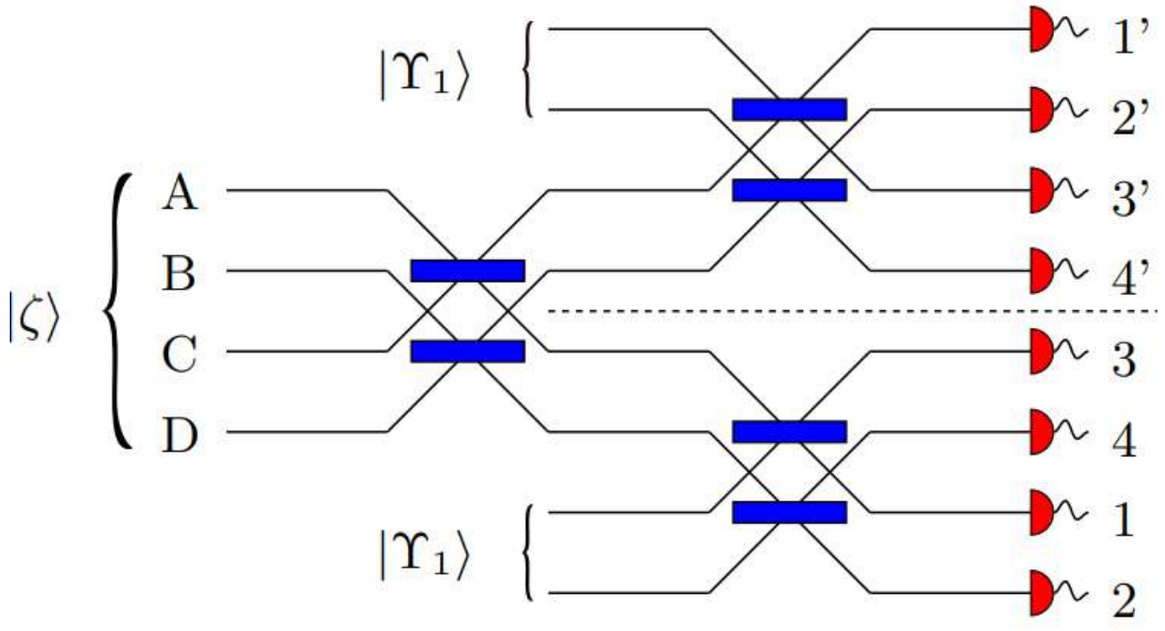

$$|\Upsilon_1\rangle = \frac{1}{\sqrt{2}}\Big(|20\rangle + |02\rangle \Big)$$

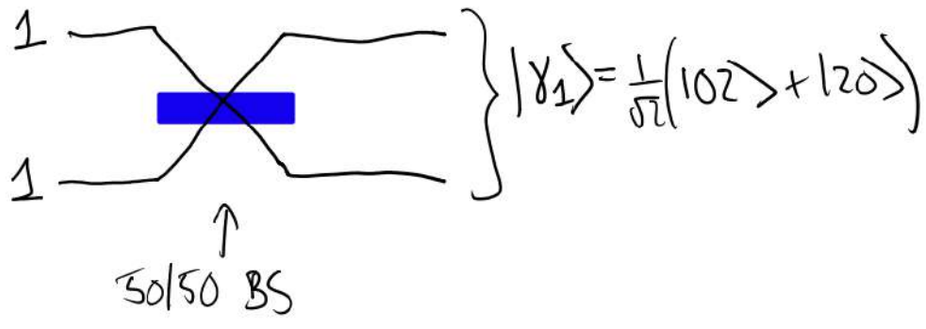

- Auxiliary state γ_1 is obtained with 2 photons and the Hong-Ou-Mandel effect.

Implementing fusion gates in linear optics

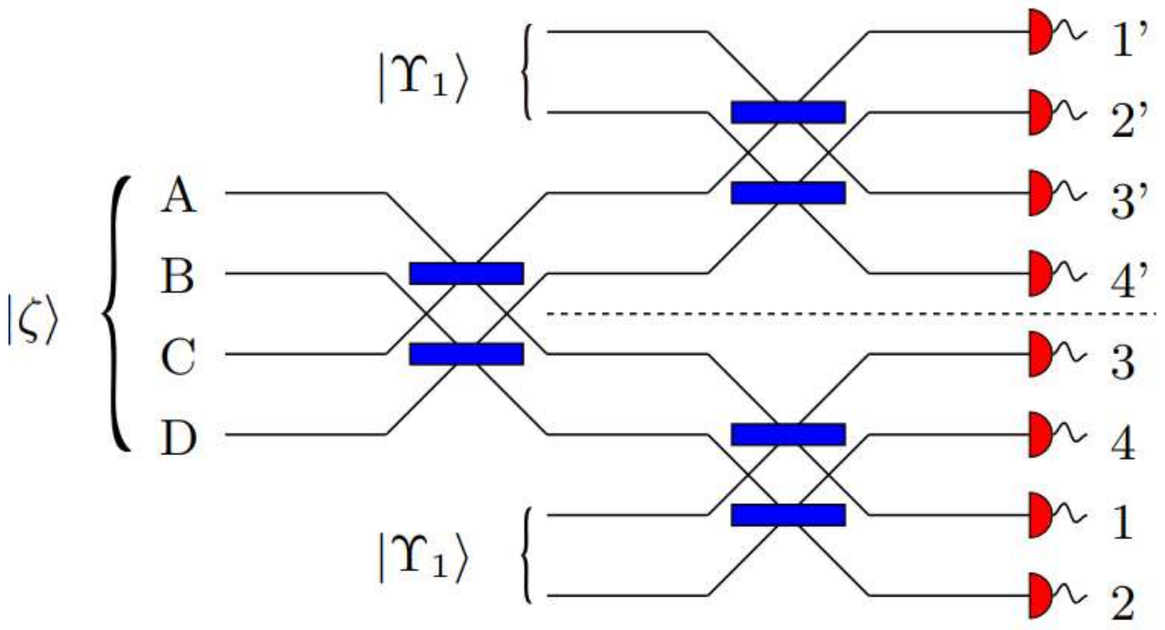

$$|\Upsilon_1\rangle = \frac{1}{\sqrt{2}}\Big(|20\rangle + |02\rangle \Big)$$

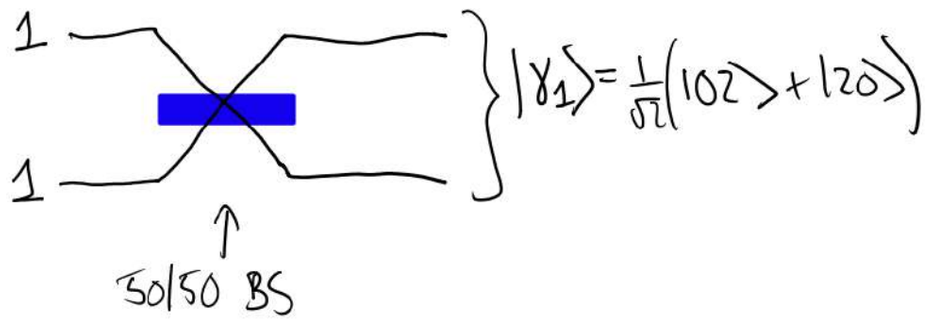

- By using 2 auxiliary states γ_1 (i.e., 4 photons) it can be shown that the linear-optical set-up above does Bell basis discrimination with efficiency ¾. This is a so-called boosted fusion gate.

- Higher efficiencies possible, but using entangled auxiliary photon states – which may not be easy to prepare.

- Ewert and van Loock also show there is a scheme with efficiency 25/32=0.78125 >3/4, and using only unentangled auxiliary photons – apparently the best known efficiency using single-photon auxiliary states and linear optics only.

Fusion-based computation – alternating entangling & computation

- Fusion-based computation = MBQC with alternating steps of entangling gates and adaptive fusion – controlled by outcomes of previous fusion measurements
- See S. Bartolucci *et al.*, *Nat Commun* **14**, 912 (2023).

a) Fusion Network

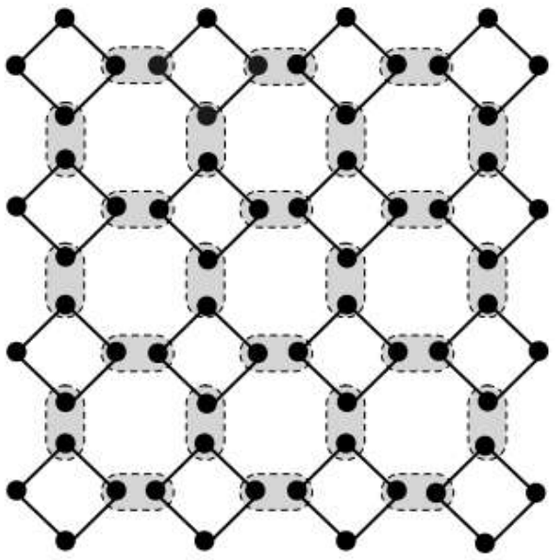

i) Resource states

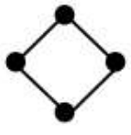

ii) Fusion measurements



b) Fusion based quantum computing architecture

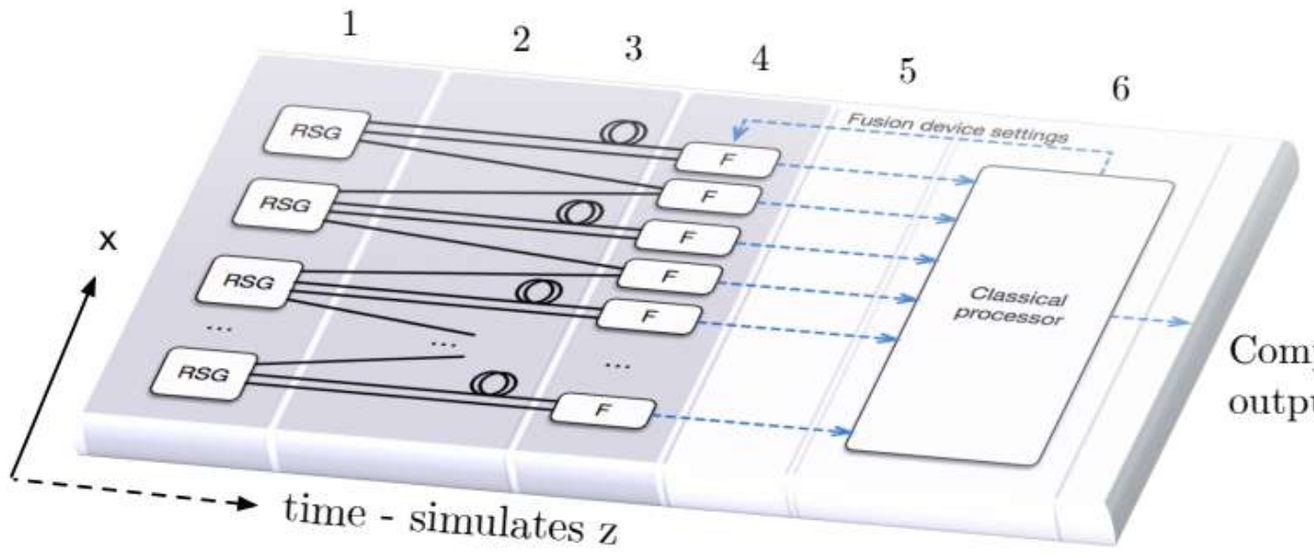

RSG — **1.** Resource state generators repeatedly create entangled states

2. Fusion network router sends qubits to fusion locations.

3. Delays - delay a qubit for one or more clockcycles.

F — **4.** Fusion devices perform reconfigurable measurements

5. Classical signal transmission

Classical Processor — **6.** Classical Processor - decoding and algorithm feedforward

- 1D resource state generators allow for 2D graph growth – it's also possible to go from 2D to 3D.

3D graph state growth via fusion gates

- Example of 3D structure – can be created by 2D resource-building chip, with time playing the role of the 3rd axis. Approach of U.S. company PsiQuantum. [S. Bartolucci *et al.*, *Nat Commun* **14**, 912 (2023)]

6-ring Fusion Network

a) 6-ring resource state unit cell

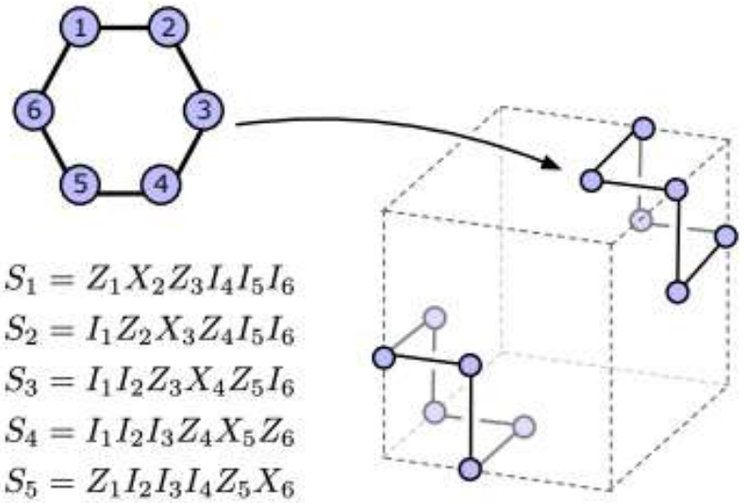

$S_1 = Z_1X_2Z_3I_4I_5I_6$
$S_2 = I_1Z_2X_3Z_4I_5I_6$
$S_3 = I_1I_2Z_3X_4Z_5I_6$
$S_4 = I_1I_2I_3Z_4X_5Z_6$
$S_5 = Z_1I_2I_3I_4Z_5X_6$
$S_6 = X_1Z_2I_3I_4I_5Z_6$

b) 6-ring fusion network

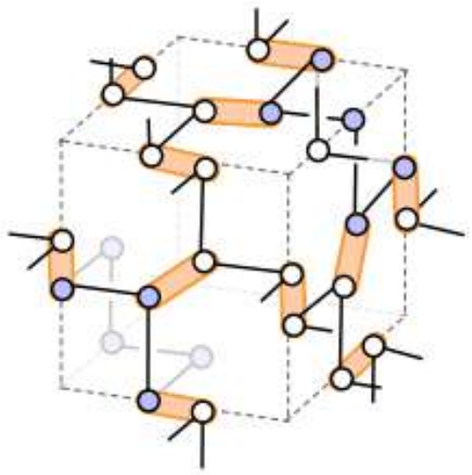

c) Fusion measurements



$M_1 = X_1X_2$
$M_2 = Z_1Z_2$

d) Multi unit cell layout

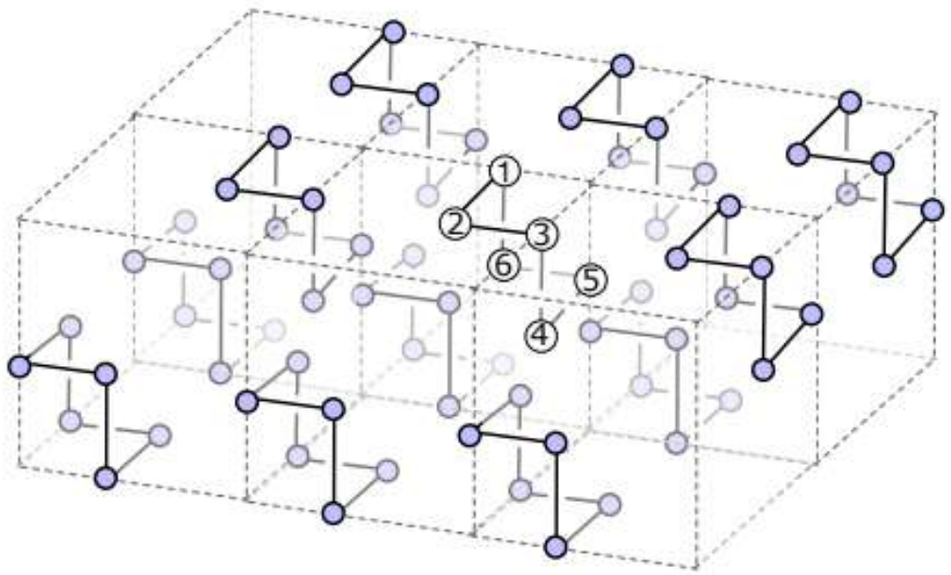

Resource states form planes in (1,1,1) direction. Each state fuses to 3 states in the layer above (e.g. 1,3,5) and 3 below (e.g. 2,4,6)

e) Syndrome graph

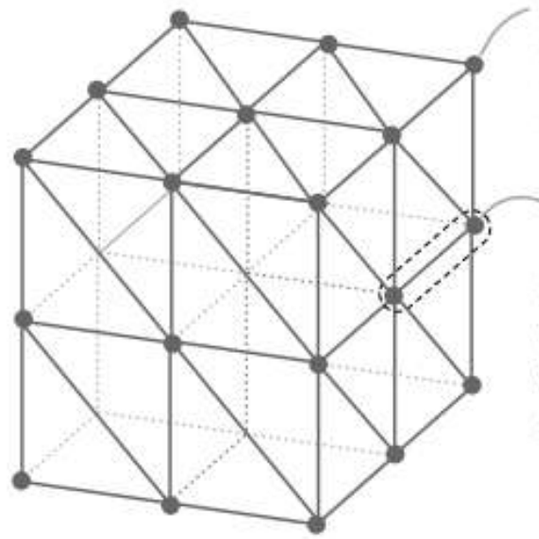

i) Vertices represent parity checks. Each parity check has 12 incident edges.

ii) Each edge on the graph represents a single fusion measurement bit.

Horizontal and vertical edges correspond to XX fusion outcomes. Diagonal edges correspond to ZZ outcomes.

Alternative approaches to simulation of linear optics

Simulation of quantum circuits

Simulation of general quantum circuits

Here we will be discussing strong simulation of general quantum circuits, i.e. we want to calculate a single amplitude, corresponding to a chosen initial and final state.

Two approaches:

- Brute-force calculation storing and updating the quantum state **- Schrodinger** approach
- Calculation with polynomial-sized memory – **Feynman** approach

Schrodinger simulation: exp(n) time, exp(n) space

This is the approach most students of QM would take. Setting:

- *n* qubits
- depth *m* (= number of temporal layers of gates)

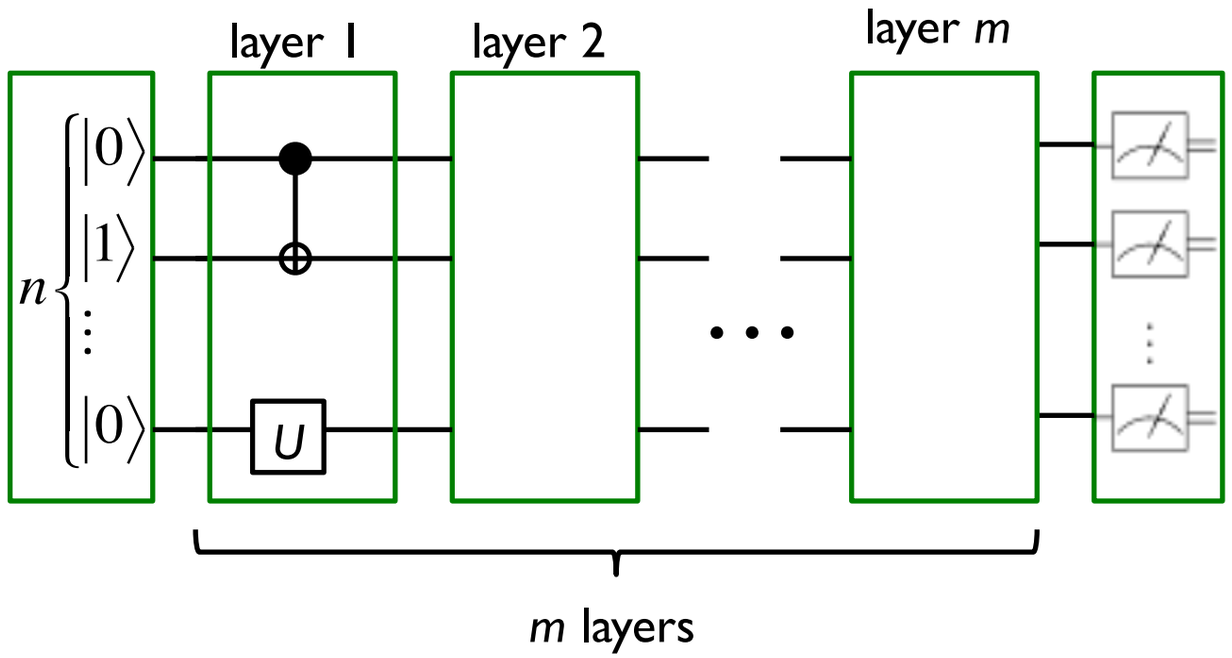

- Simulation:

1. Initialize input state;
2. Calculate state after first layer of one- and two-qubit gates;
3. Repeat step 2 above until we get the final state;
4. Directly read out the amplitudes corresponding to the final states of interest.

- Complexity:
  - *m*2^*n* time
  - *2^n* space (to store wavefunction amplitudes)

Another approach: Feynman's path integral

- Let us look at how we can compute amplitudes using Feynman's path integrals:
- **Goal**: calculate $\langle y|U_2U_1|x\rangle$

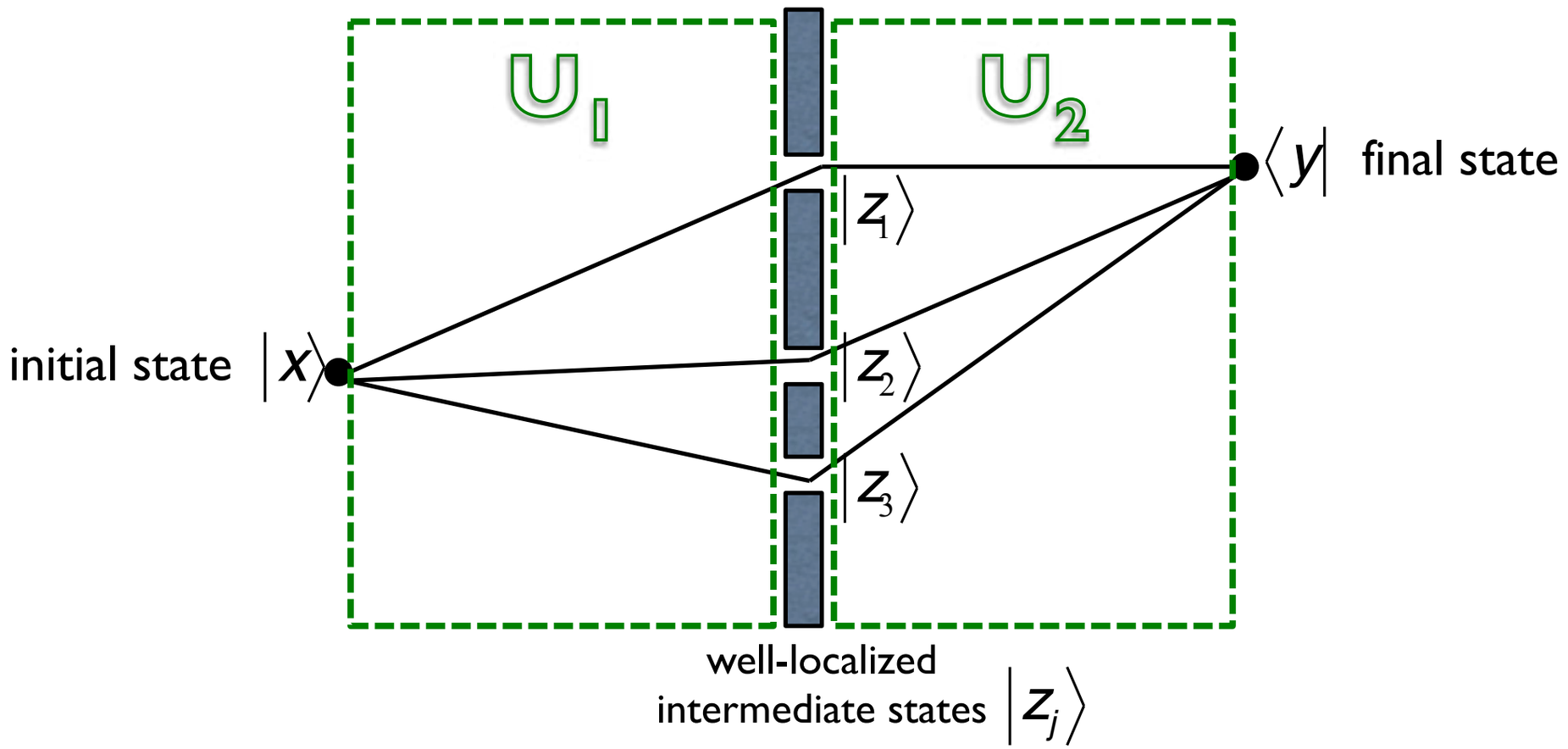

$$\langle y|U_2U_1|x\rangle = \langle y|U_2\underbrace{\left(\sum_{j=1}^{3}|z_j\rangle\langle z_j|\right)}_{=1}U_1|x\rangle = \underbrace{\sum_{j=1}^{3}\langle y|U_2|z_j\rangle\langle z_j|U_1|x\rangle}_{\text{sum over path amplitudes}}$$

Simulation using Feynman's sum over path amplitudes

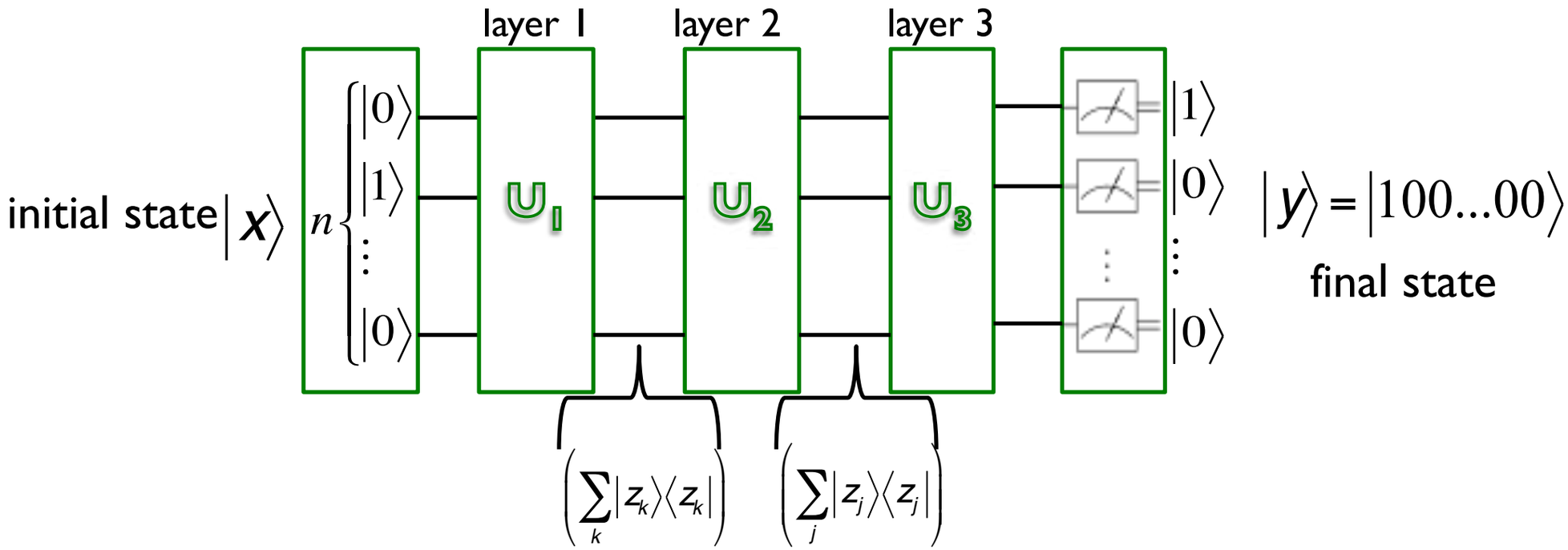

$$\langle y|U_3U_2U_1|x\rangle = \langle y|U_3\left(\sum_j |z_j\rangle\langle z_j|\right)U_2\left(\sum_k |z_k\rangle\langle z_k|\right)U_1|x\rangle = \sum_{j,k}\langle y|U_3|z_j\rangle\langle z_j|U_2|z_k\rangle\langle z_k|U_1|x\rangle$$

If we want the amplitude that the top qubit's measurement be 1:

$$\langle 1anything|U_3U_2U_1|x\rangle = \sum_w\sum_{j,k}\langle 1w|U_3|z_j\rangle\langle z_j|U_2|z_k\rangle\langle z_k|U_1|x\rangle$$

Complexity for m unitary layers:

- *exp(n)* time
- *poly(n,m)* space (not **exponential** like the Schrodinger scheme)

Refinements and applications

- Simulating circuits with:
  - *n* qubits
  - *m* gates
  - depth *d*

- Aaronson and Chen (2016) algorithms: [arXiv:1612.05903]

  1. poly(n,m) space, m^O(n) time
  2. poly(n,m) space, d^O(n) time – recursive version
  3. "Smooth tradeoff" with Schrodinger's scheme:
     - Halve memory use in S. scheme => multiply time use by *d*

- Applications to large-scale classical simulation of quantum circuits
  - Pednault et al., arXiv:1710.05867
  - Boixo et al., arXiv:1712.05903

- Feynman approach used in **Google's quantum advantage** paper (2019)

- Other schemes:
  - contracting tensor networks (Markov, Shi 2008).



Nature 574, 505 (2019), Google AI Quantum

Feynman path sums for simulation of boson sampling

Permanents of matrices give probability amplitudes

- A general m-mode linear-optical interferometer is described by a general *m x m* unitary matrix *U*

$$(a_i^\dagger)_{\text{out}} = \sum_{j=1}^{m} U_{ij} (a_j^\dagger)_{\text{in}}$$

U_{ij} = probability that a photon entering in mode *j* exits in mode *i*

- For input of Fock states |S>, output of Fock states |T>, total N photons:

$$\text{INPUT } |S\rangle = |s_1, s_2, \ldots, s_m\rangle$$

$$\text{OUTPUT } |T\rangle = |t_1, t_2, \ldots, t_m\rangle$$

we build *mxm* U_{ST} by picking *ti* copies of ith column of *U*, then *sj* copies of jth row of *U*. Then the probability amplitude is given by

$$\text{amp}(S \to T) = \frac{1}{\sqrt{s_1! \cdots s_m!\, t_1! \cdots t_m!}} \text{Perm}(U_{ST})$$

- Best general algorithm known is Ryser's, complexity O(N2^N)

Basic building block: amplitude for a single beam-splitter

- Visual notation:

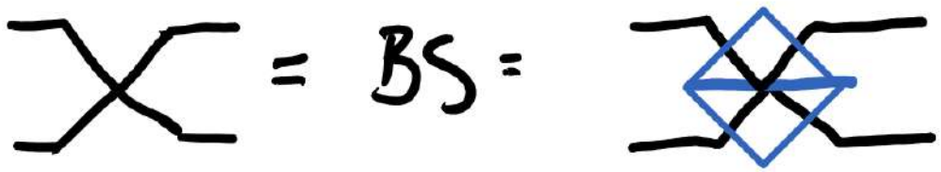

Phase shifters are everywhere -
I'm not drawing them

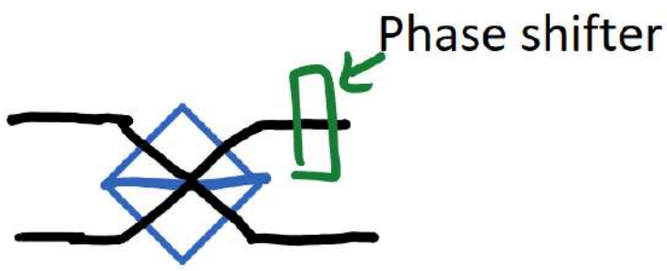

- Key building block: amplitude for a single BS with arbitrary Fock-state input/outputs of up to *N* photons

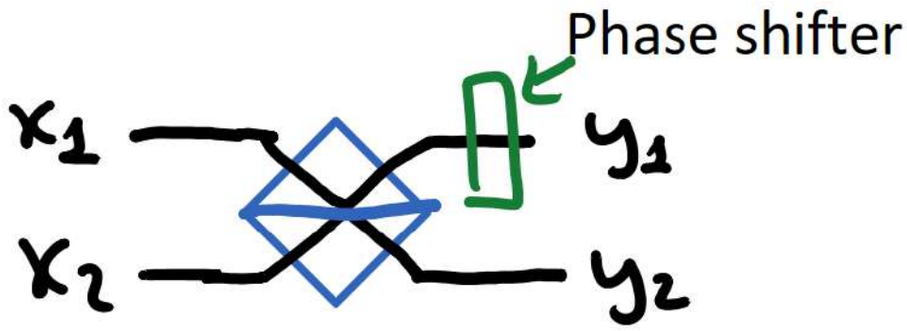

  - Amplitude is proportional to permanent of *N x N* matrix U_{ST}
  - U_{ST} has only 4 different entries – this allows for a simplified calculation
  - Computational complexity is *O(N)*, assuming fixed precision

Simulating Fock states in multimode interferometers

- Two-layer interferometer with fixed Fock-state inputs and outputs:

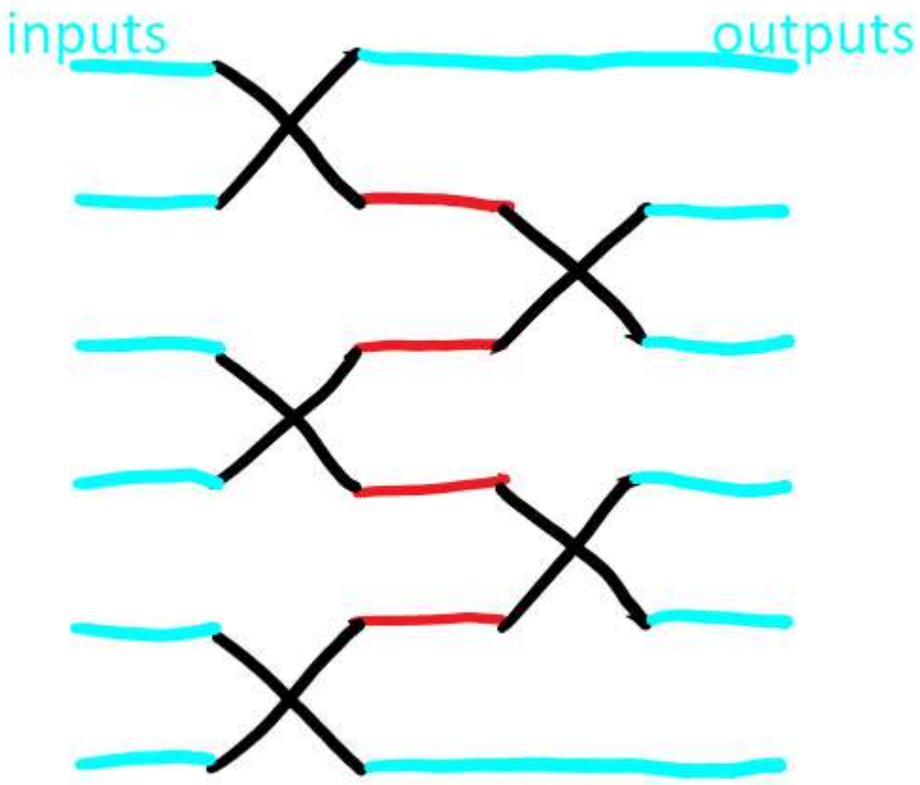

Amplitude = trivial sum over paths with a single term

Simulating Fock states in multimode interferometers

- Two-layer interferometer with fixed Fock-state inputs and outputs:

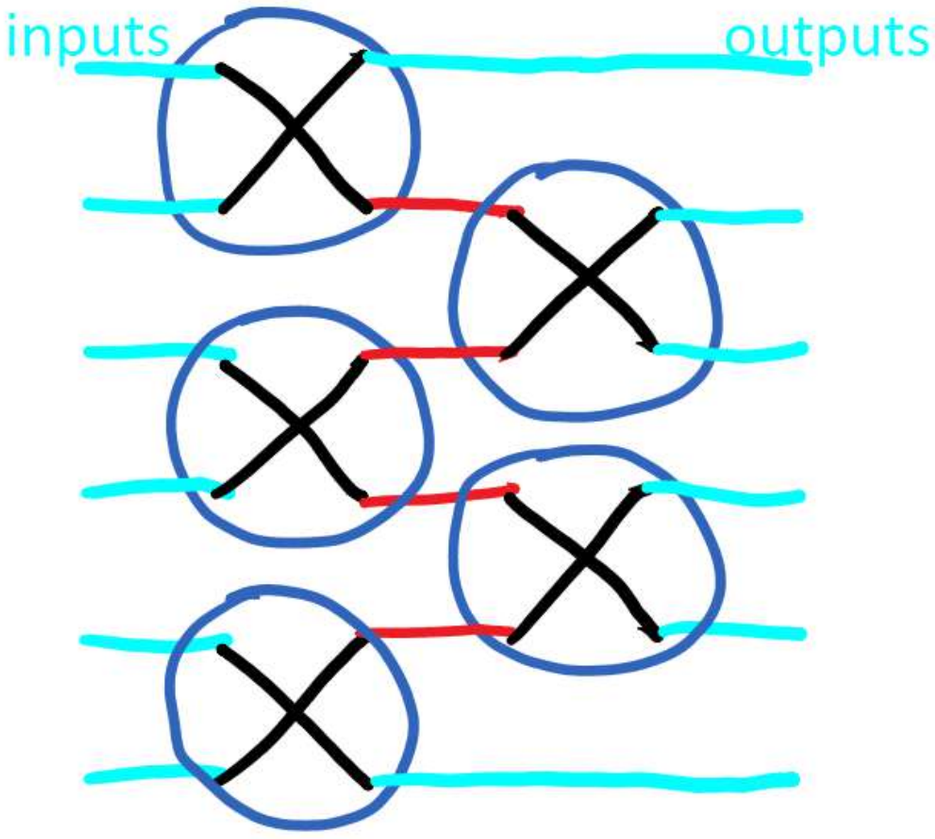

Amplitude = trivial sum over paths with a single term

Simulating Fock states in multimode interferometers

- Two-layer interferometer with fixed Fock-state inputs and outputs:

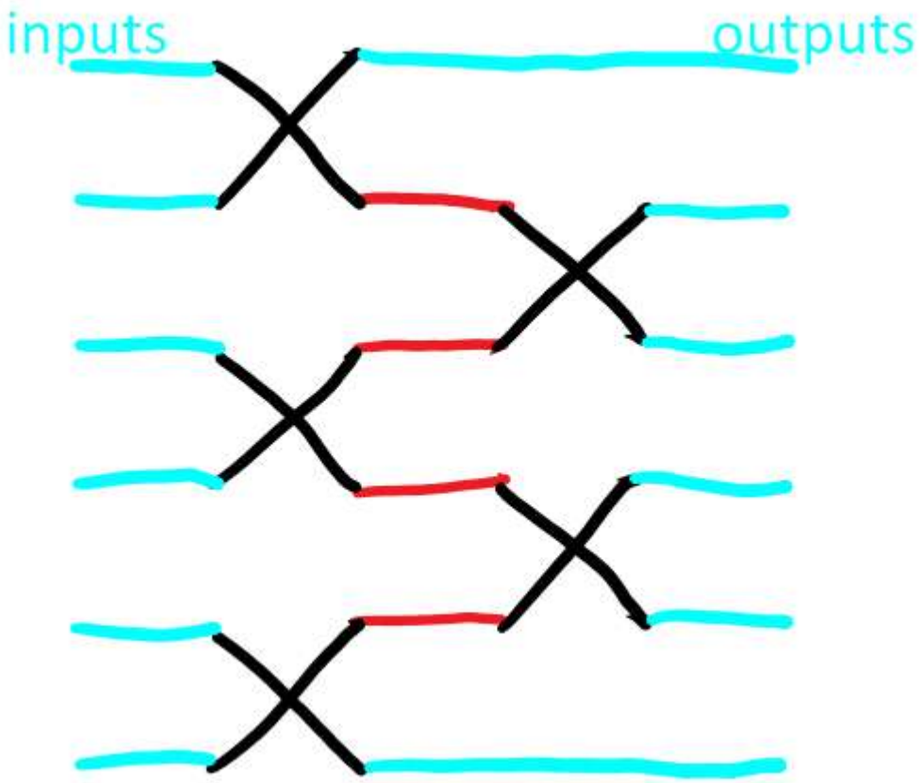

Amplitude = trivial sum over paths with a single term

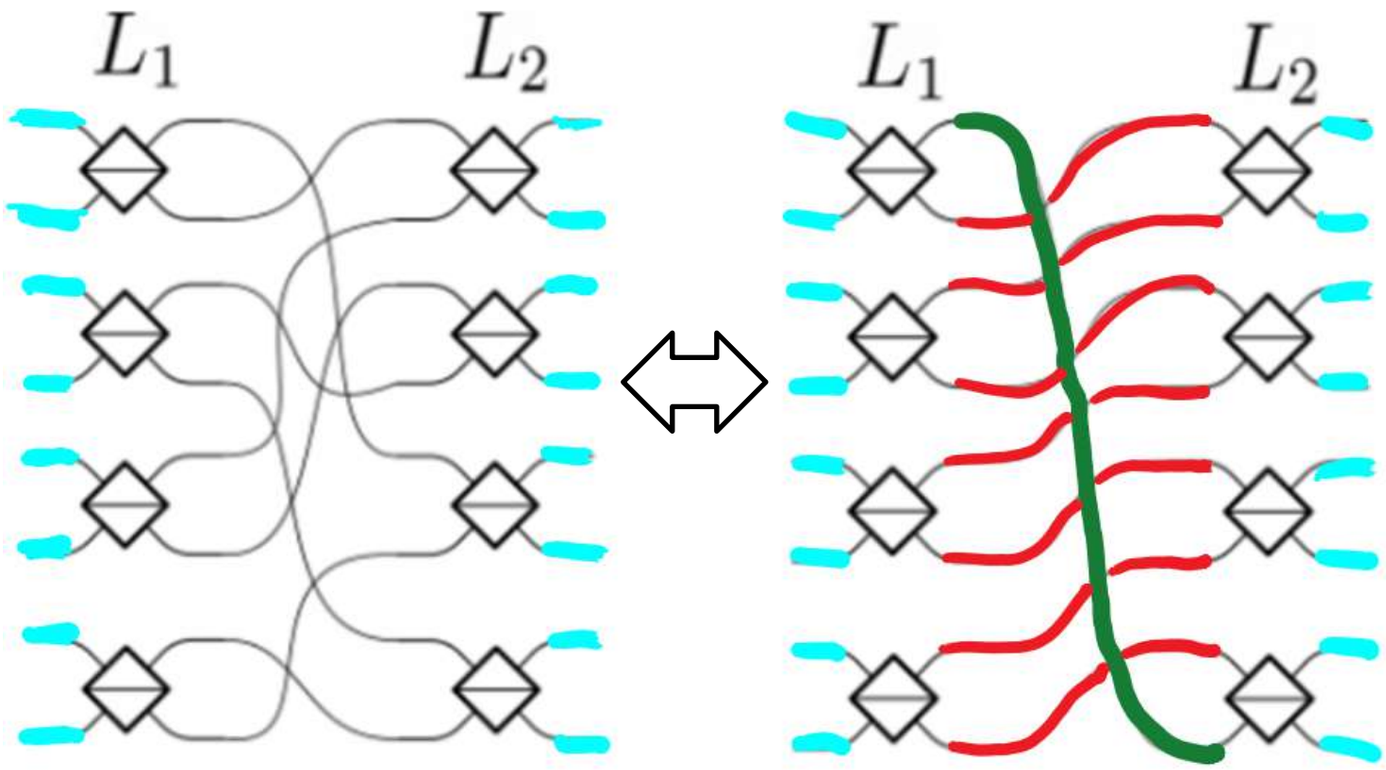

No. of paths
= [smallest number of photons in any BS +1]

Simulating Fock states in multimode interferometers

- Two-layer interferometer with fixed Fock-state inputs and outputs:

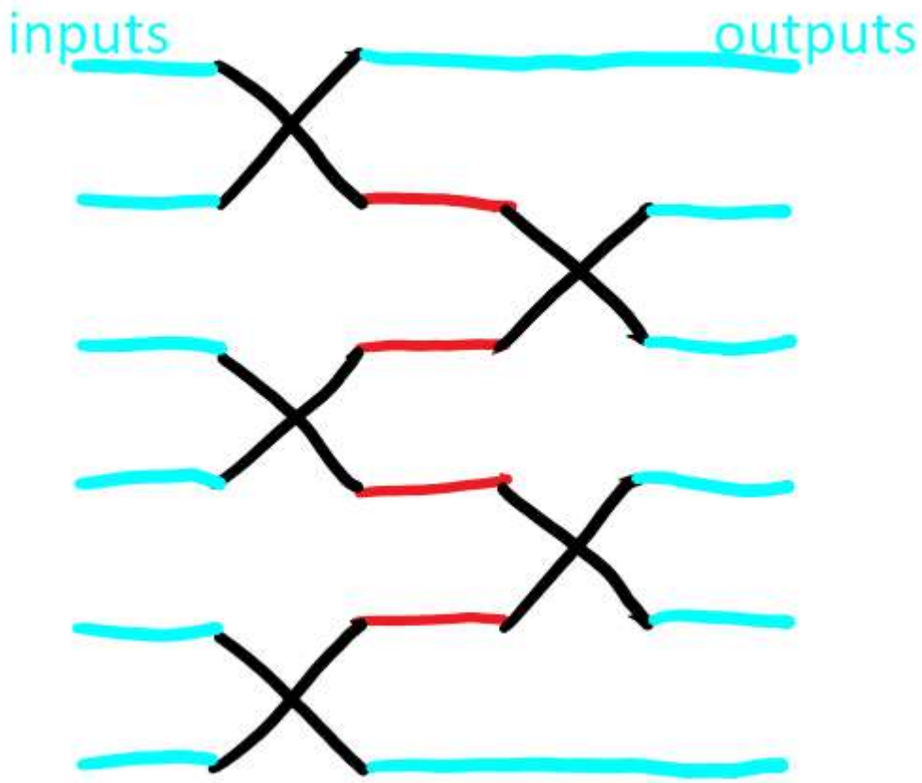

Amplitude = trivial sum over paths with a single term

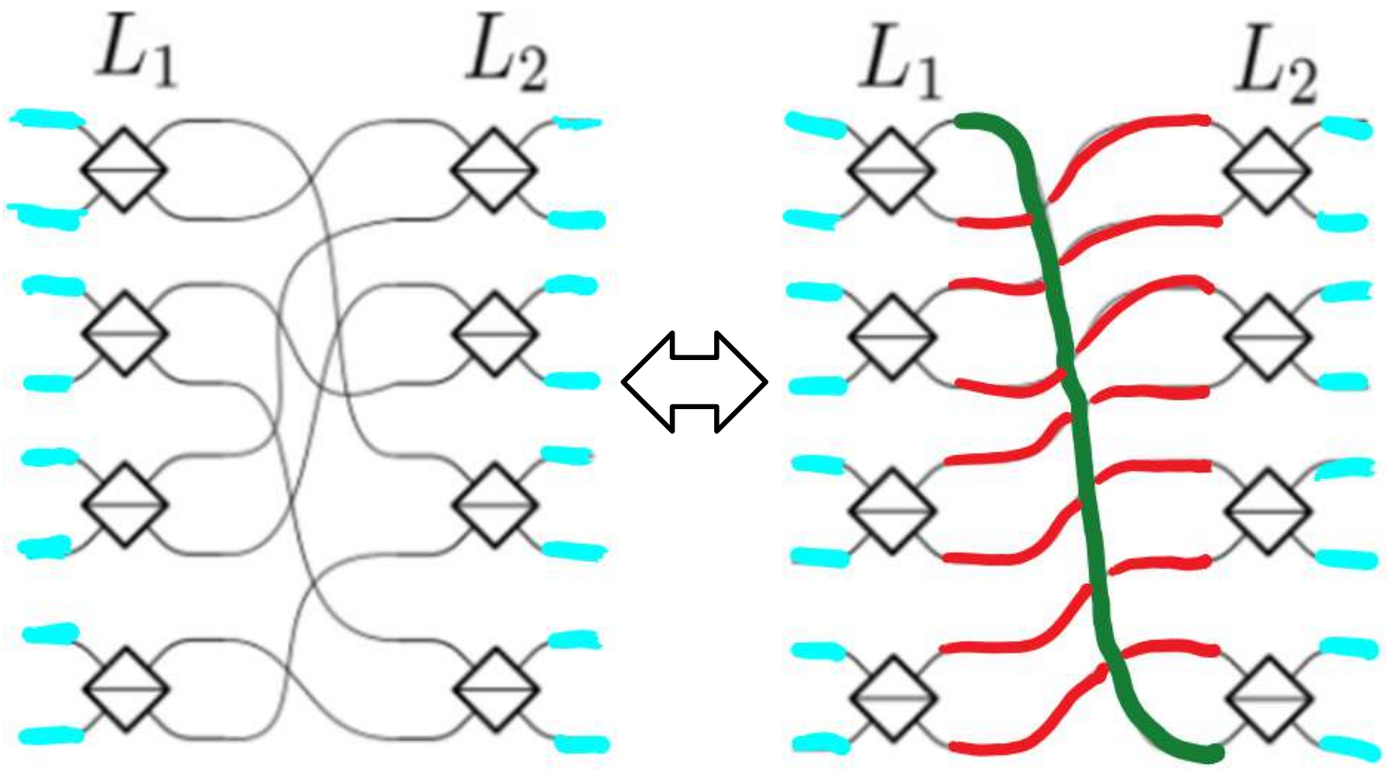

No. of paths
= [smallest number of photons in any BS +1]

- Complexity scales:
  - linearly with min no. of photons in any BS
  - linearly with no. of modes

Simulating Fock states in multimode interferometers

- Three-layer interferometer with fixed Fock-state inputs and outputs:

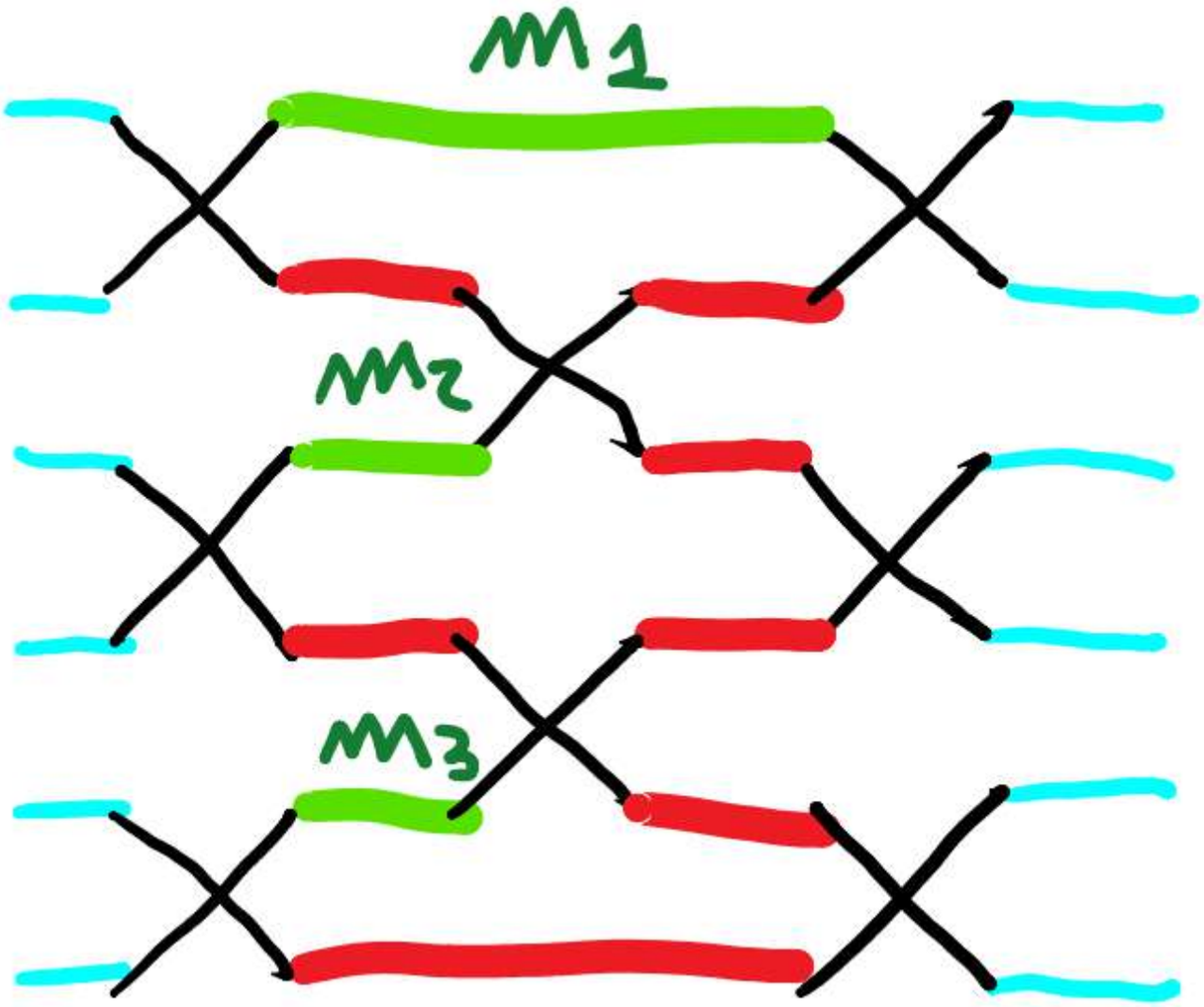

Simulating Fock states in multimode interferometers

- Three-layer interferometer with fixed Fock-state inputs and outputs:

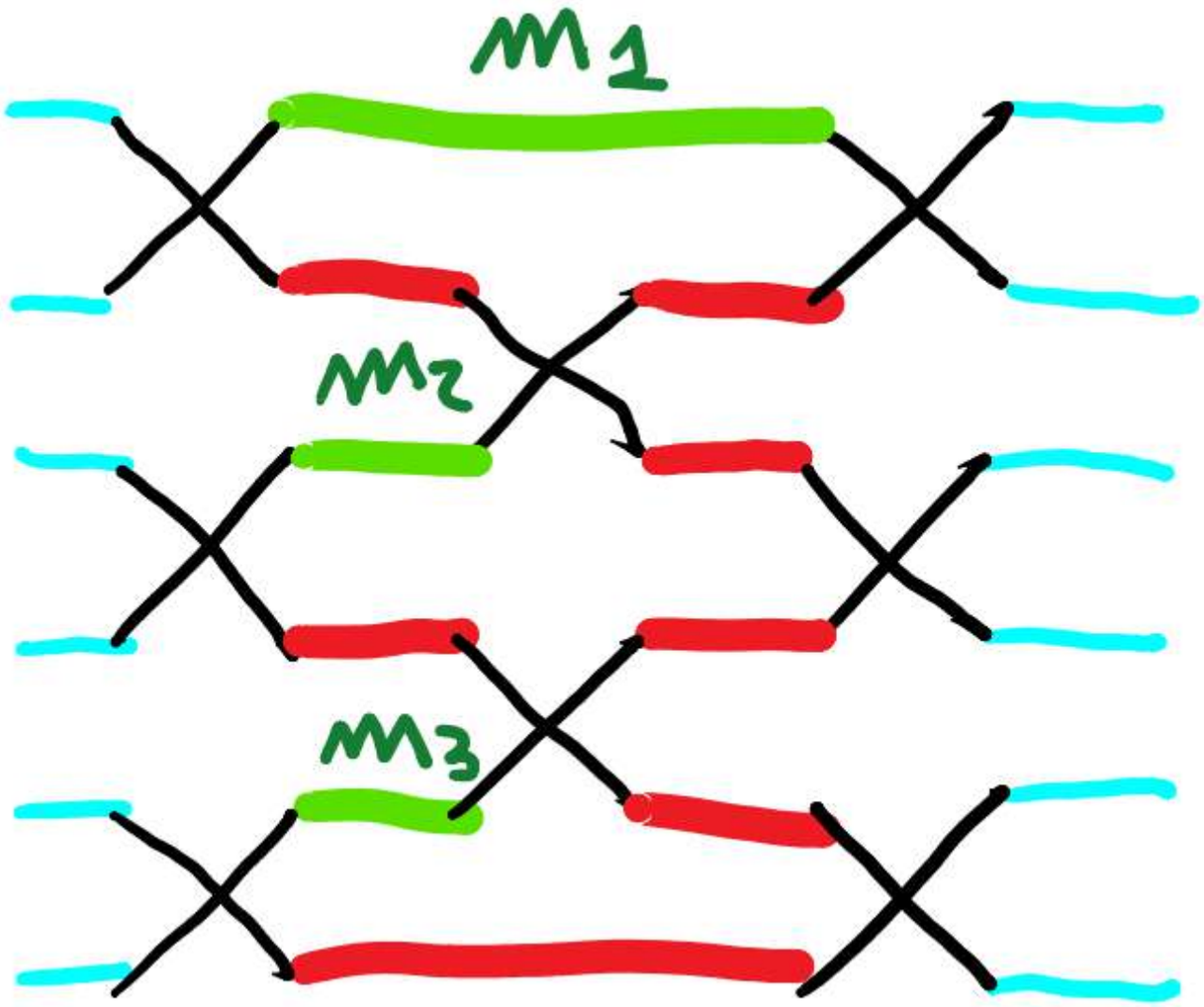

- Complexity:
  - Exponential in number of modes, linear in density = photons/mode
  - Still asymptotically better than brute force permanent calculation (Ryser algorithm)
- See preprint: W. F. Balthazar, Q. M. B. Palmer, A. E. Jones, J. F. F. Bulmer, E. F. Galvão. Feynman path sum approach for simulation of linear optics. Preprint arXiv:2510.26408 [quant-ph].

Simulating Fock states in multimode interferometers

- Tensor contraction dramatically decreases complexity

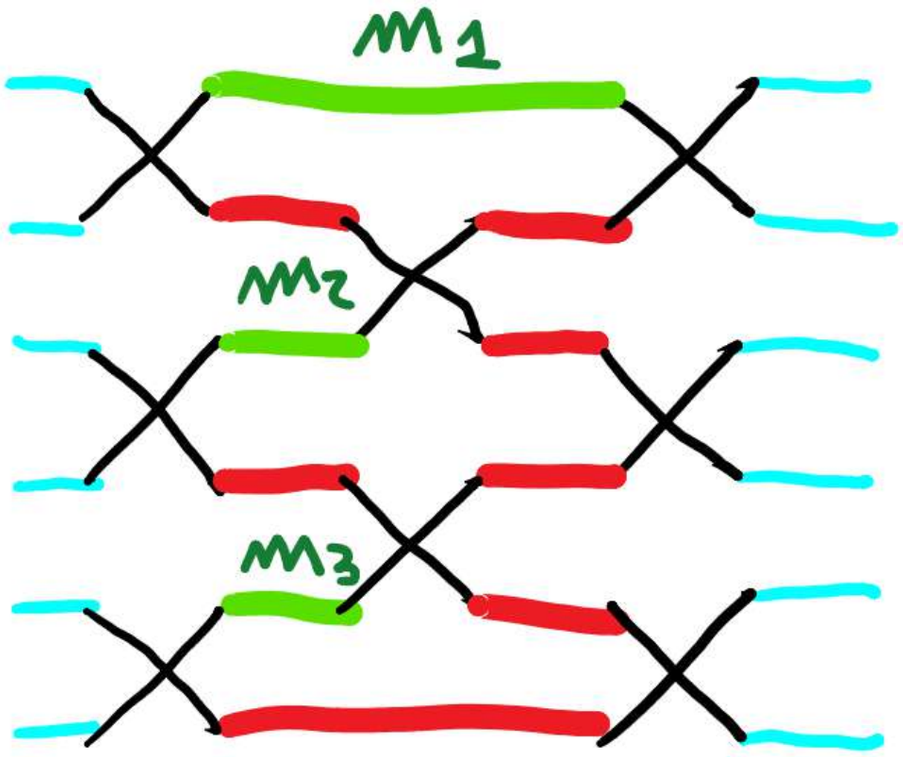

Simulating Fock states in multimode interferometers

- Tensor contraction dramatically decreases complexity

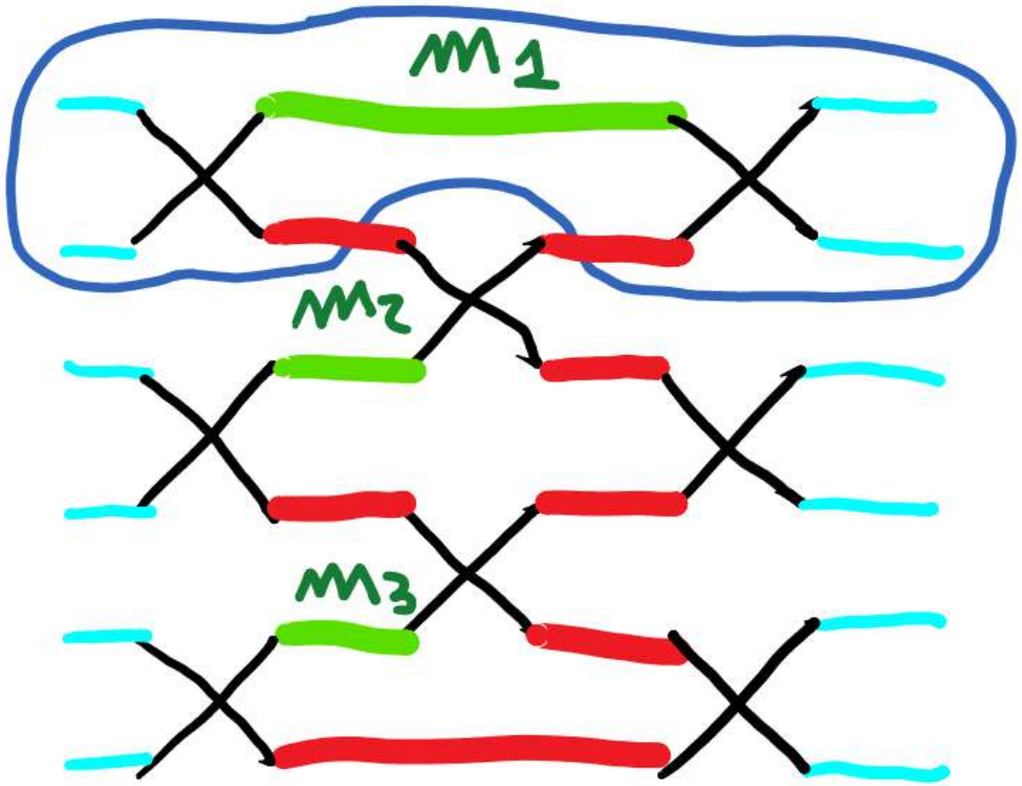

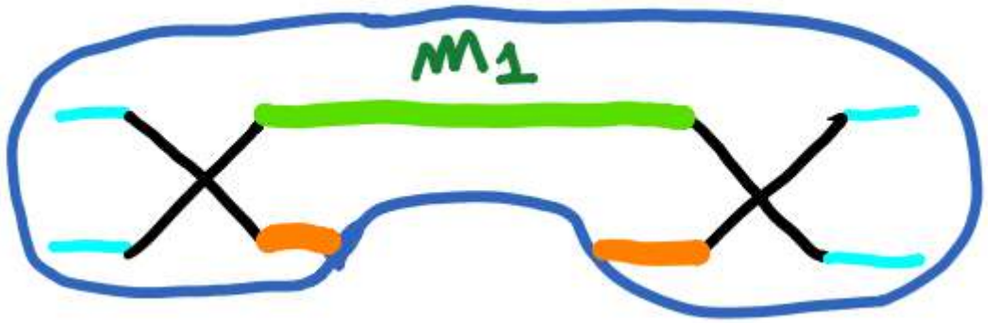

Sum paths by varying m_1 , storing one amplitude for each possible occupation number at orange modes

Simulating Fock states in multimode interferometers

- Tensor contraction dramatically decreases complexity

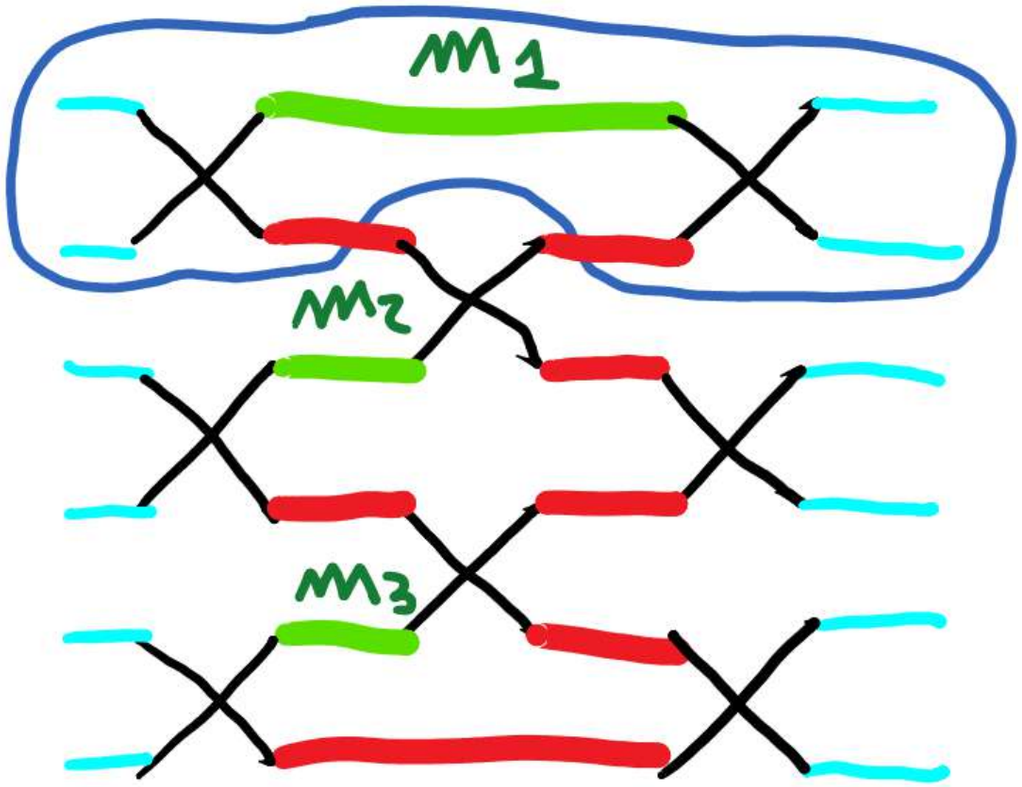

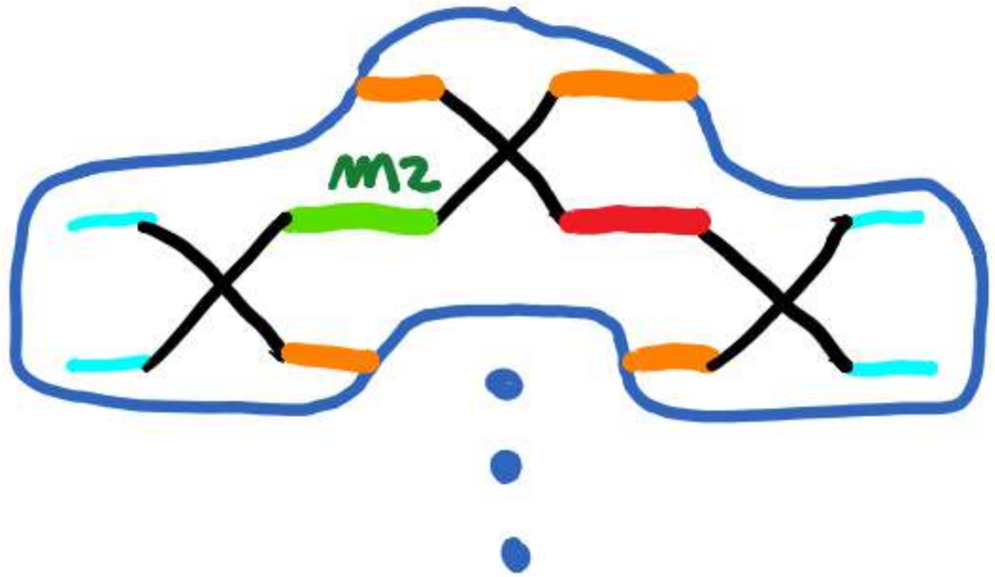

For each possible value of orange amplitudes, sum amplitudes over m_2 to calculate and store one amplitude for each possible value of the bottom orange modes. Repeat until we're done.

Simulating Fock states in multimode interferometers

- Tensor contraction dramatically decreases complexity

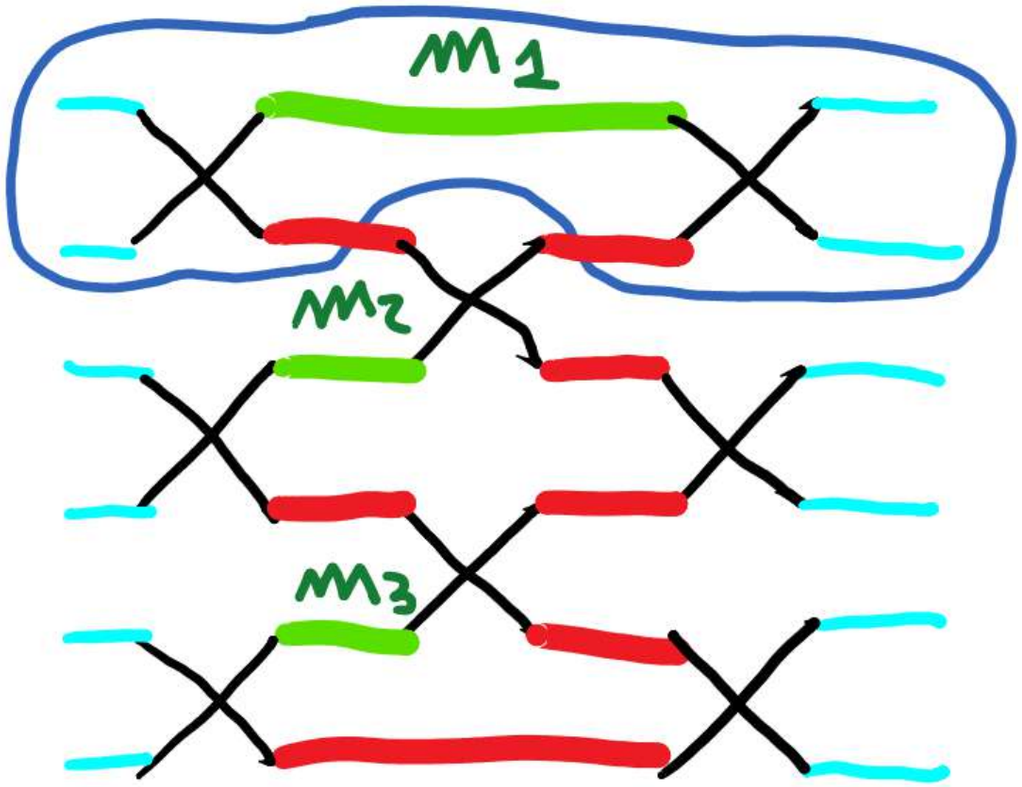

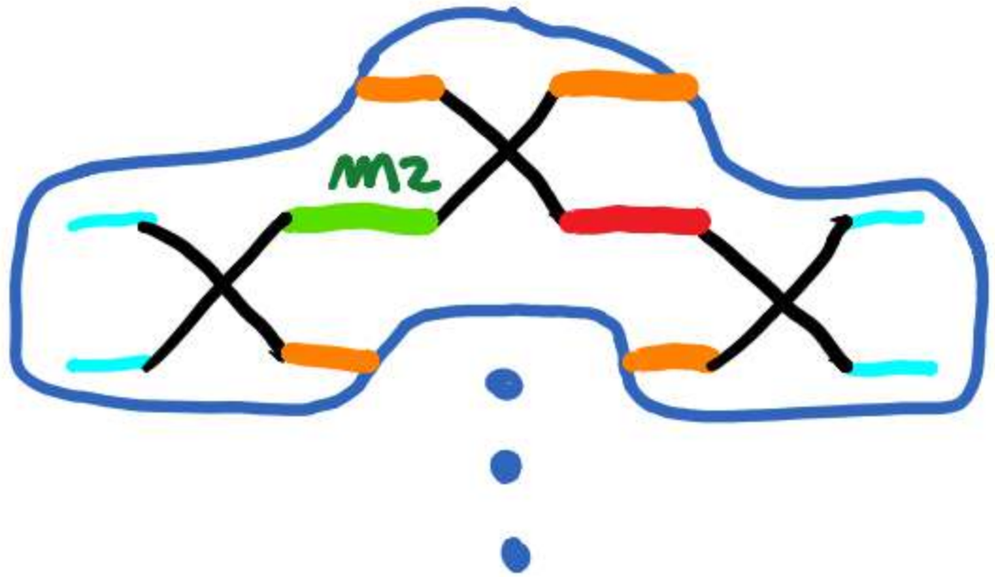

For each possible value of orange amplitudes, sum amplitudes over m_2 to calculate and store one amplitude for each possible value of the bottom orange modes. Repeat until we're done.

- Runtime exponential in number of layers, linear in number of modes
- Memory exponential in number of layers, linear in number of modes

⇨ Advantage over Ryser for shallow interferometers & high input/output occupation numbers

Alternative continuous-variable schemes for photonic QC

- There are a few alternative schemes for continuous-variable photonic quantum computation.

- Here we'll briefly review some of the basic ideas:

  - Teleportation-based gates
  - Cluster-state, MBQC using CV
  - Hybrid CV-DV Gottesman-Kitaev-Preskill (GKP) bosonic codes

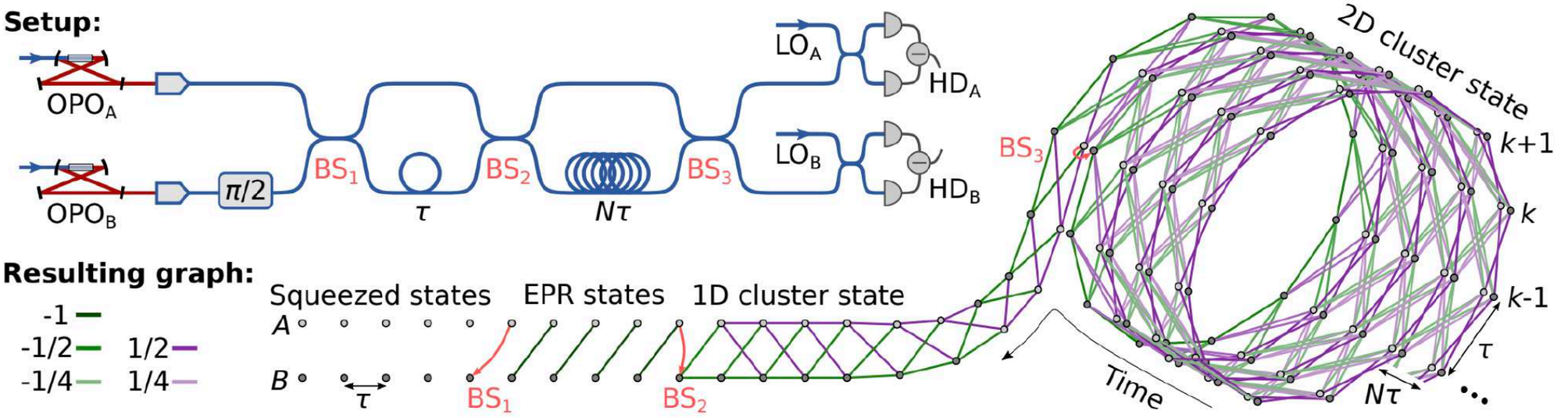

[Larsen et al., *Science* 366, 369 (2019)]

CV photonic quantum computation

- In CV photonics, quantum computation can be implemented using different architectures

	Qubit QIP	Continuous-variable QIP
Carrier	Degrees of freedom of a photon	Quadratures of a light field
Basis	Photon number basis: $\{\|n\rangle\}$	Quadrature basis: $\{\|x\rangle\}$ or $\{\|p\rangle\}$
Encoding	$\|\psi\rangle = \alpha\|1\rangle\|0\rangle + \beta\|0\rangle\|1\rangle$	$\|\psi\rangle = \int_{-\infty}^{\infty} \psi(x)\|x\rangle dx$
Easy gates	One-qubit rotation gate	Gaussian gate (displacement, phase shift, beam splitter, and squeezing)
Difficult gates	Two-qubit gate (e.g., CNOT gate)	Non-Gaussian gate (e.g., cubic phase gate)

Teleportation-based gates

- key advantage: CV teleportation is in principle deterministic
- Limitation: fidelity of teleported state is limited by degree of squeezing of auxiliary states

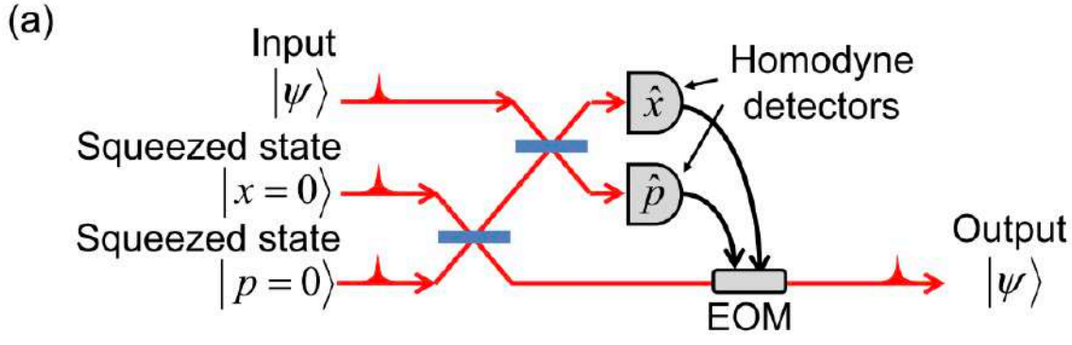

Deterministic teleportation circuit

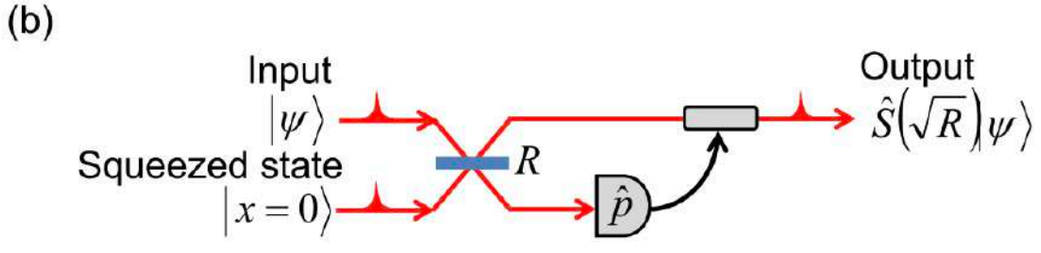

Teleportation-based squeezing gate

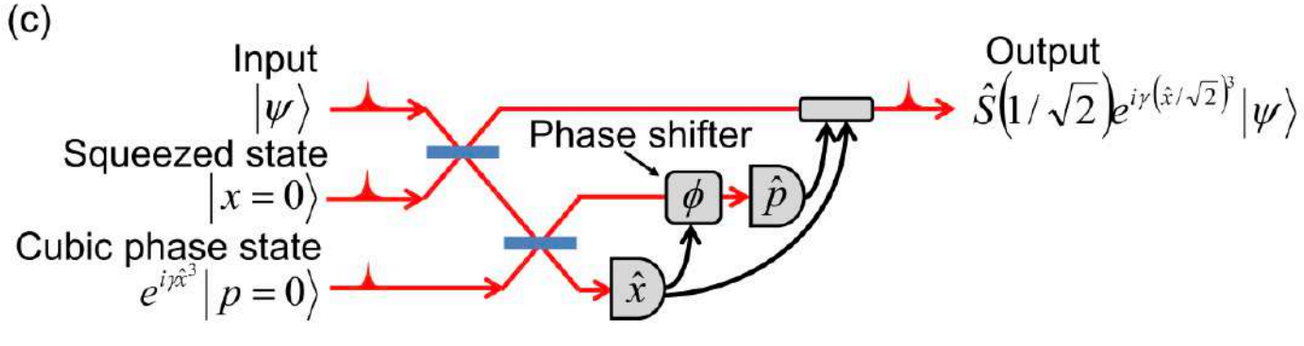

Teleportation-based (non-Gaussian) cubic-phase gate

From: Takeda, Furusawa, APL Photonics 4, 060902 (2019)

Cluster-state MBQC in CV

- Squeezed states from optical parametric oscillator (OPO)
- Beam-splitters implement entangling gates
- Appropriate choices of measurement bases in homodyne detection
- Feedforward of adaptive transformation on un-measured modes.

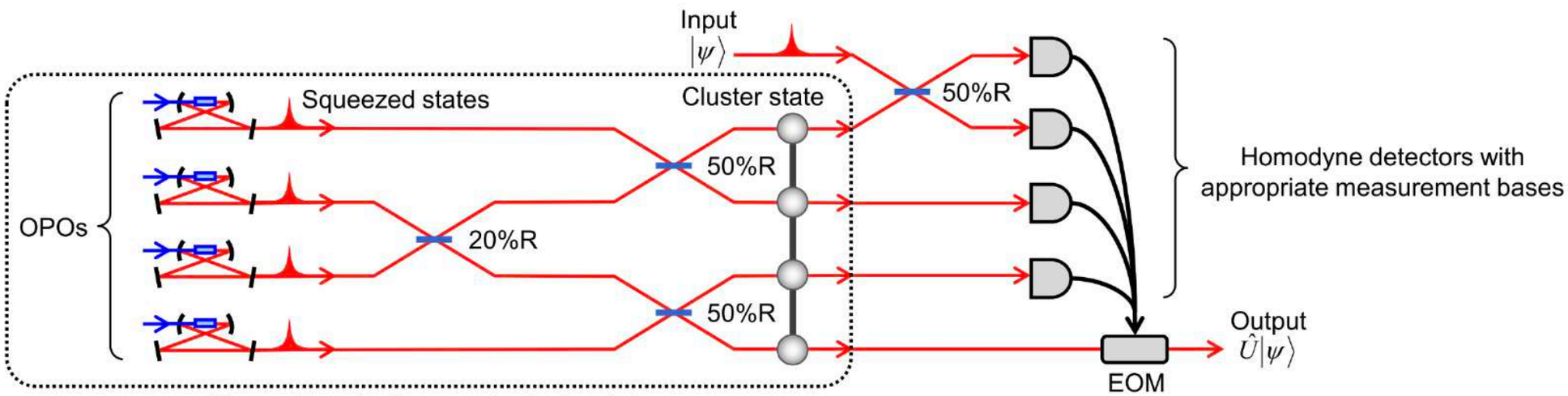

Generation of a four-mode cluster state

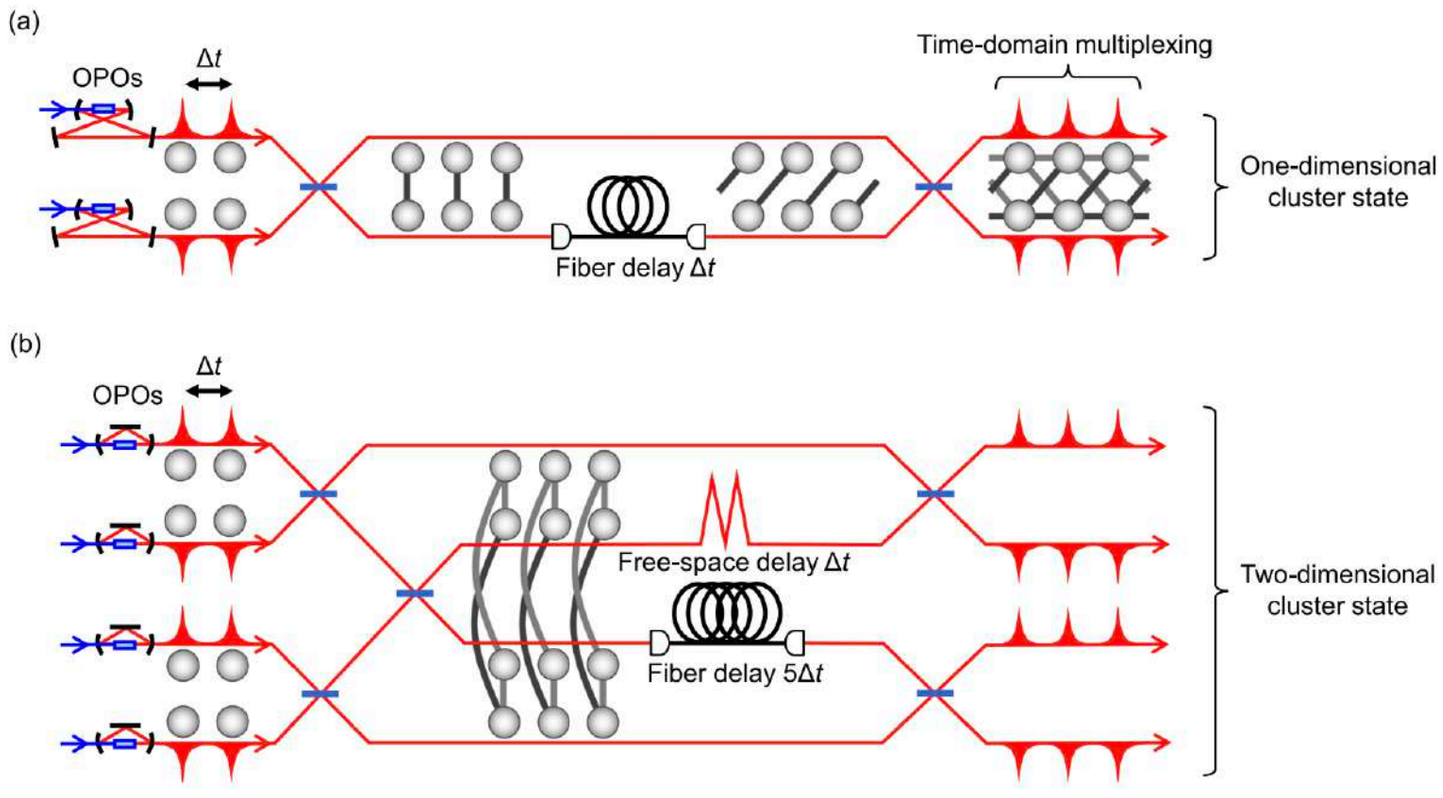

- A single delay line allows the growth of linear cluster states
- Two delay lines allows the creation of 2D cluster states that are universal for QC

From: Takeda, Furusawa, APL Photonics 4, 060902 (2019)

Cluster-state MBQC in CV

- Squeezed states from optical parametric oscillator (OPO)
- Beam-splitters implement entangling gates
- Appropriate choices of measurement bases in homodyne detection
- Feedforward of adaptive transformation on unmeasured modes.

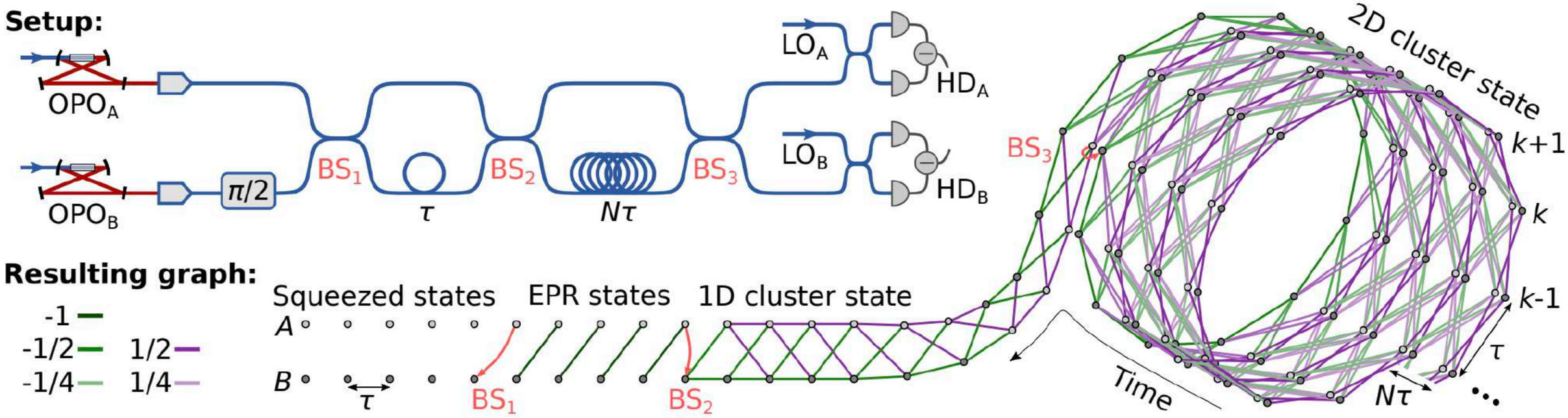

- Experimental demonstration of non-separability of 30000 modes [Larsen et al., *Science* 366, 369 (2019)]
- A similar experiment was also performed by the Furusawa group [Asavanant et al., *Science* 366, 373 (2019)]

Gottesman-Kitaev-Preskill (GKP) bosonic codes

- CV codes that encode qubits into CV, non-Gaussian states.
- Ideal GKP encoding protects against errors caused by phase-space displacement

[Gottesman, Kitaev, Preskill, "Encoding a qubit in an oscillator". *Physical Review A*. **64** (1) 012310 (2001)]

- Approximate GKP states can be created with squeezing, linear optics, and photo-counting

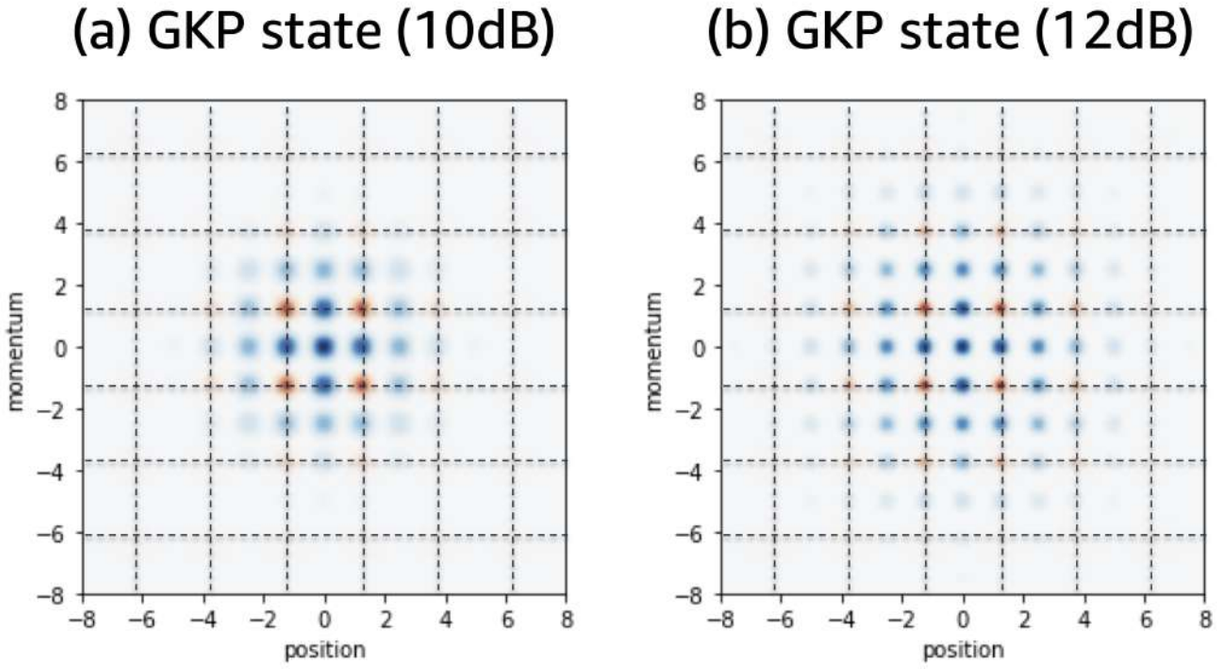

- Logical 0 = even positions
- Logical 1 = odd positions

The grid encoding of a qubit protects against X and Z errors - i.e. all errors of a single qubit. Quality depends on degree of squeezing.

- Multiple qubits can be encoded in multiple modes, and Gaussian operations implement Clifford gates. This kind of bosonic code is being investigated by Amazon and Xanadu (Canada)

[Noh, Chamberland, Brandão, PRX Quantum 3, 010315 (2022)]

Thank you for your attention!

MBQC - Extra slides

MBQC: step-by-step

- How do corrections affect future measurements?
  We can have both X and Z corrections:
  Outcomes of previous measurements:

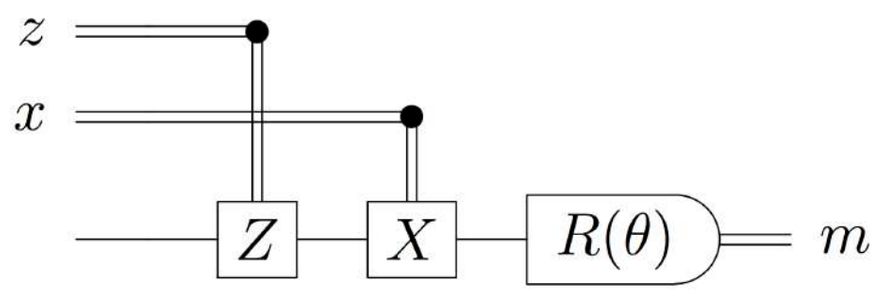

$$z, x \in \{-1, 1\}$$

- As $XR(\theta)X = R(-\theta)$, X corrections turn $\theta \rightarrow -\theta$
- As $ZR(\theta)Z = -R(\theta)$, Z corrections invert the output

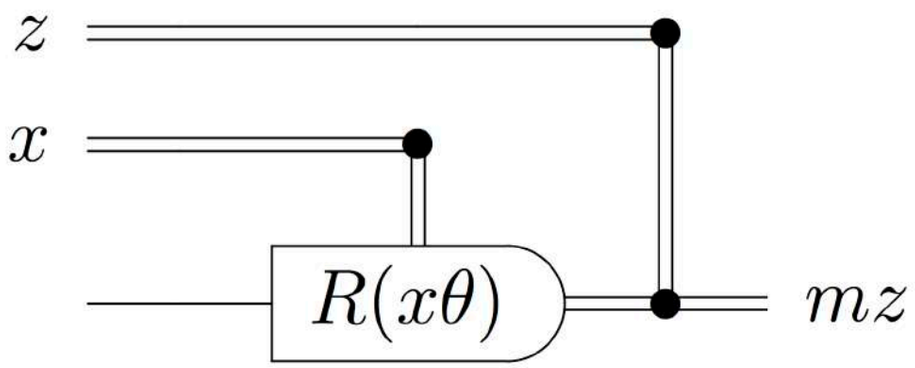

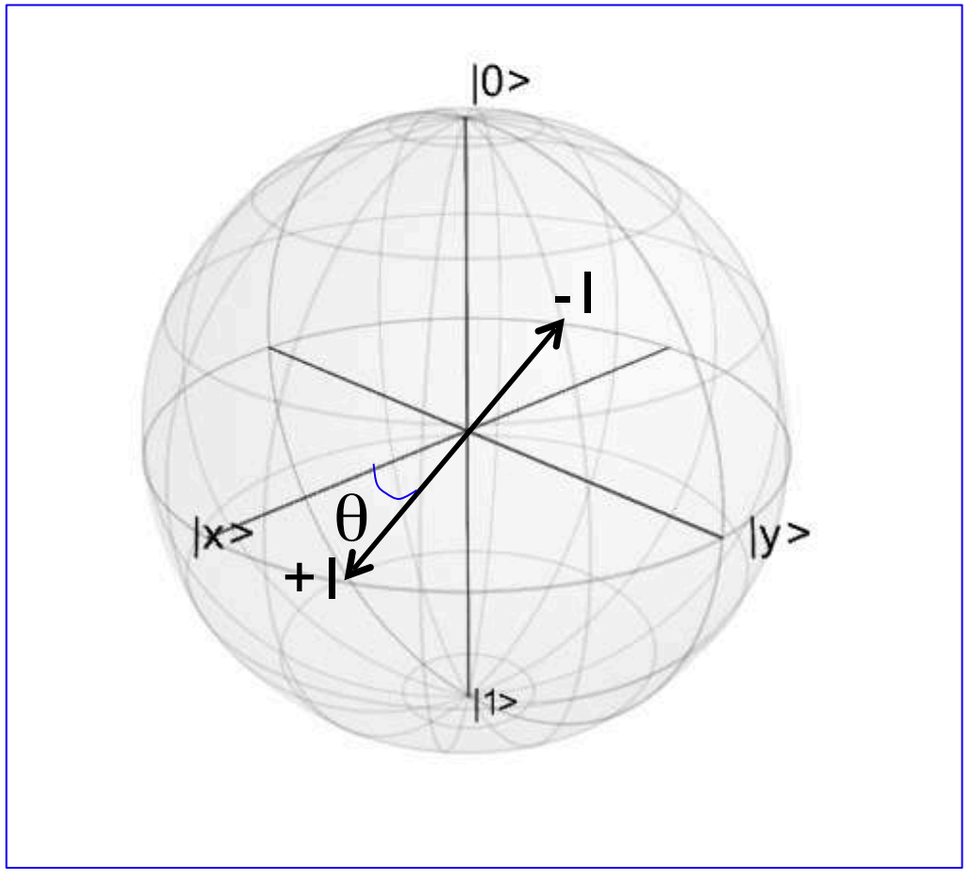

MBQC: step-by-step

- How do corrections affect future measurements?
  We can have both X and Z corrections:
  Outcomes of previous measurements:

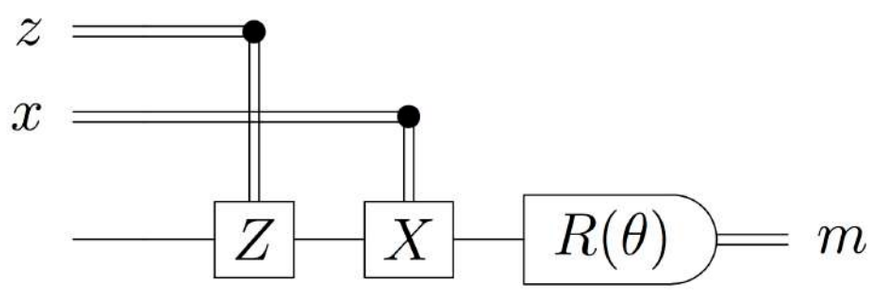

$$z, x \in \{-1, 1\}$$

- As $XR(\theta)X = R(-\theta)$, X corrections turn $\theta \rightarrow -\theta$
- As $ZR(\theta)Z = -R(\theta)$, Z corrections invert the output

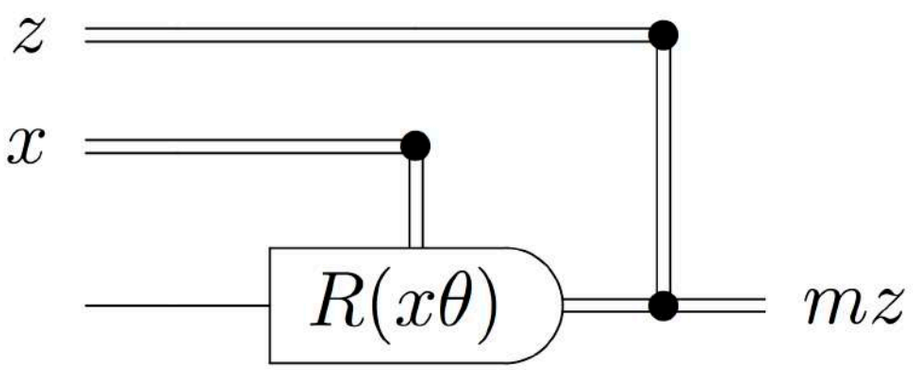

X correction

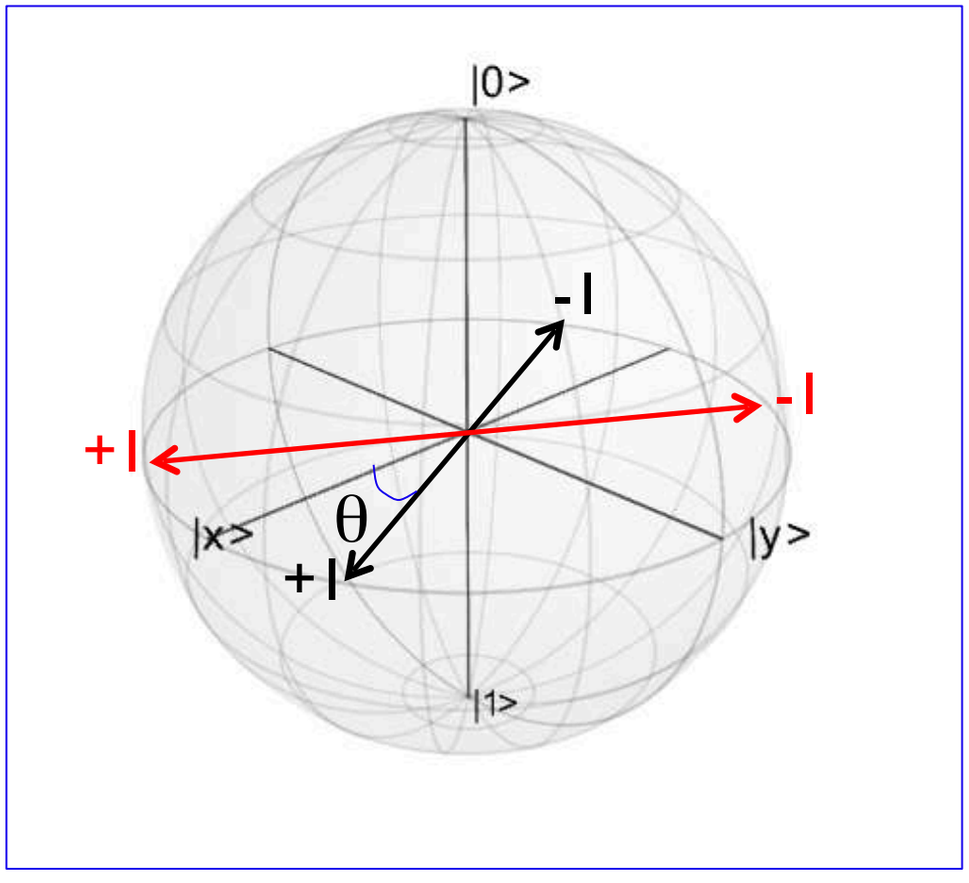

MBQC: step-by-step

- How do corrections affect future measurements?
  We can have both X and Z corrections:
  Outcomes of previous measurements:

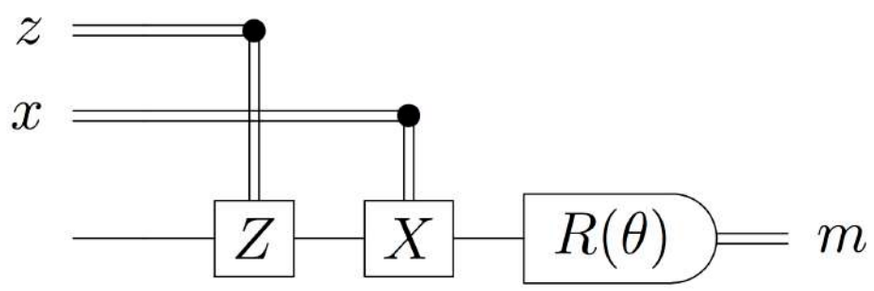

$$z, x \in \{-1, 1\}$$

- As $XR(\theta)X = R(-\theta)$, X corrections turn $\theta \rightarrow -\theta$
- As $ZR(\theta)Z = -R(\theta)$, Z corrections invert the output

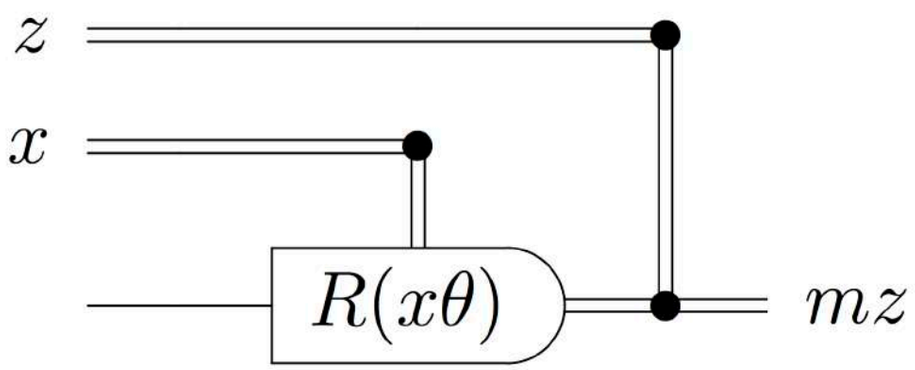

X correction
Z correction

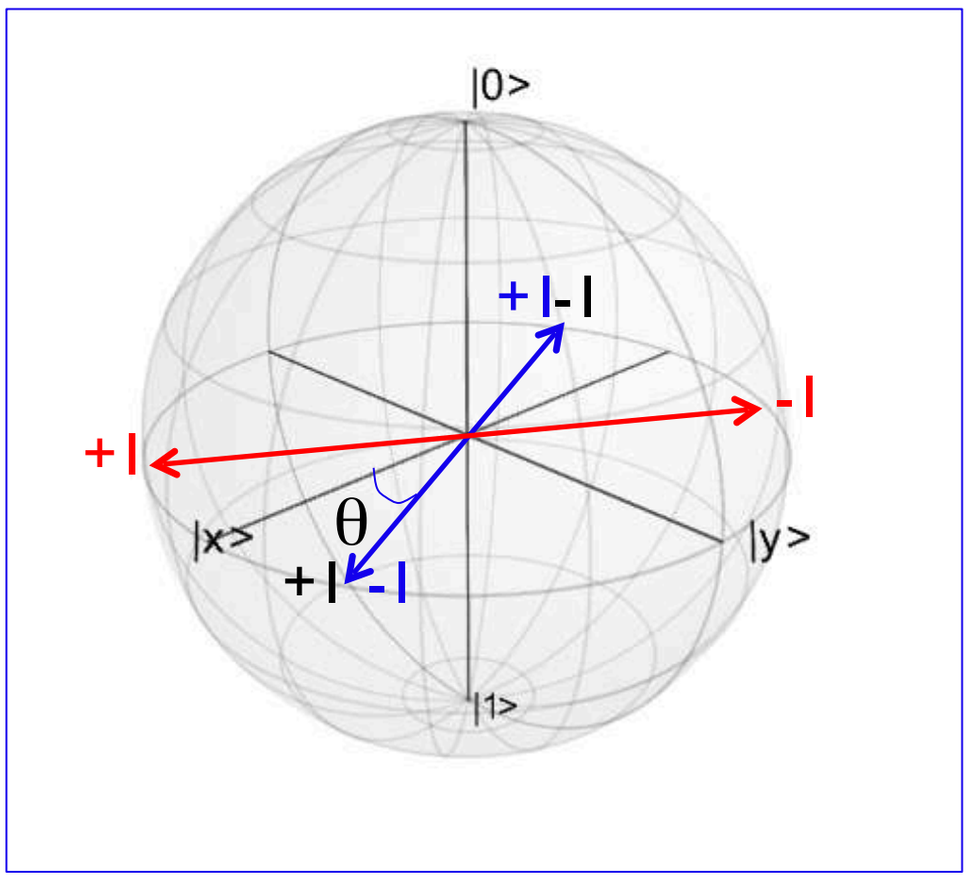

MBQC: step-by-step

- How do corrections affect future measurements?
  We can have both X and Z corrections:
  Outcomes of previous measurements:

$$z, x \in \{-1, 1\}$$

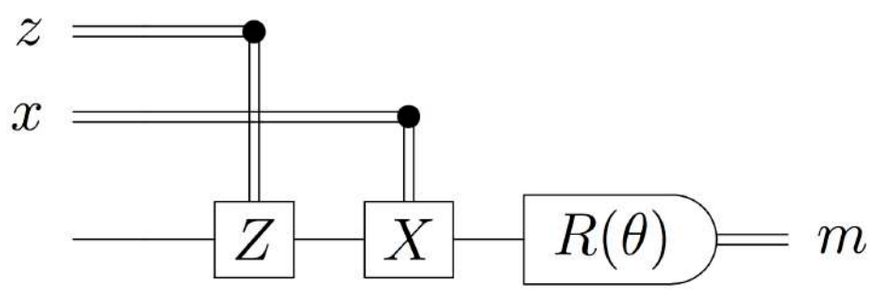

- As $XR(\theta)X = R(-\theta)$, X corrections turn $\theta \rightarrow -\theta$
- As $ZR(\theta)Z = -R(\theta)$, Z corrections invert the output

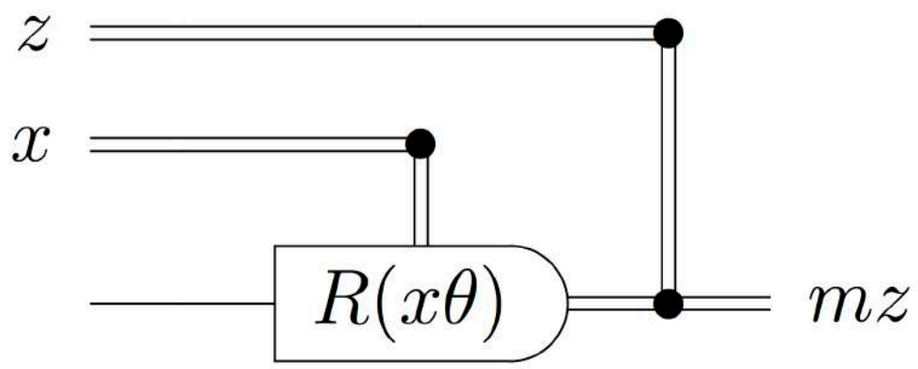

X correction
Z correction

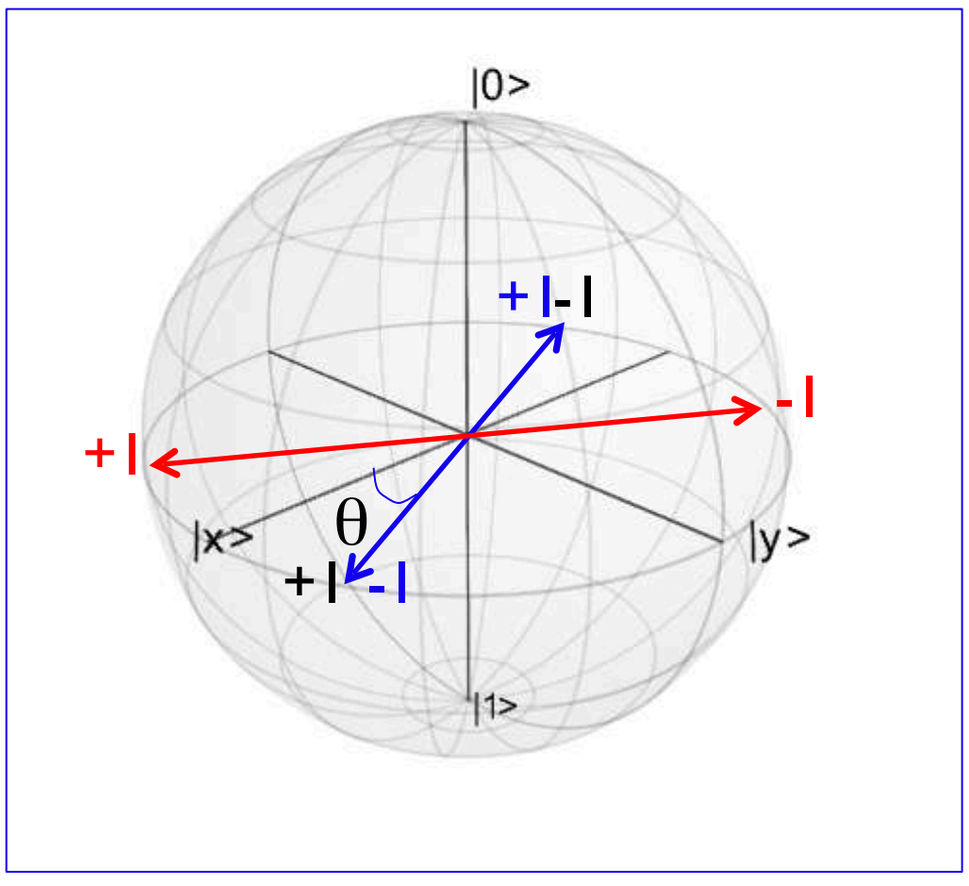

Classical control computer needs only store&update **sum modulo 2** of X and Z corrections of each qubit

This **parity computer** is quite simple, but together with the quantum resource yields universal QC

Extra slides - linear optics

Exercise 2 – Sylvester interferometer

Take the 4×4 unitary

$U = H^{\otimes 2}$, where $H = \frac{1}{\sqrt{2}}\begin{pmatrix} 1 & 1 \\ 1 & -1 \end{pmatrix} \Rightarrow U = \frac{1}{2}\begin{bmatrix} 1 & 1 & 1 & 1 \\ 1 & -1 & 1 & -1 \\ 1 & 1 & -1 & -1 \\ 1 & -1 & -1 & 1 \end{bmatrix}$

is the Hadamard matrix.

U describes a Sylvester interferometer.

Calculate the probabilities corresponding to a Fock-state input $|S\rangle = |1100\rangle$ (i.e, one photon in first mode, & 1 photon in 2nd mode), for:

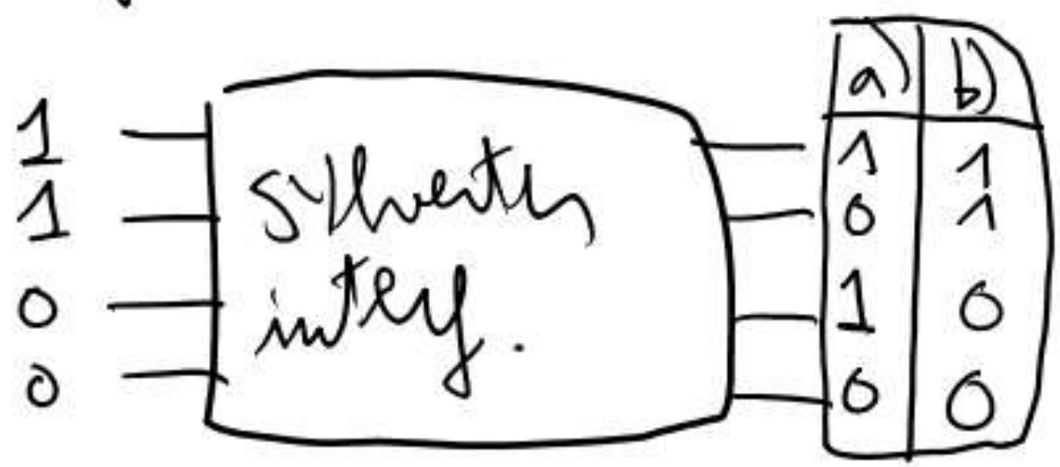

(a) output $|T_a\rangle = |1010\rangle$

(b) output $|T_b\rangle = |1100\rangle$

How to certify the boson sampler is working as expected

Science Advances **1**, e1400255 (2015)

- Cerfifying that a quantum computer is working as expected may be hard, computationally or from the point of view of sampling complexity
- Some techniques have been investigated – below a Bayesian approach to boson sampling verification.

- Bayesian certification against arbitrary alternative distributions
  - For each observed event, calculate the likelihood ratio $r_i = \dfrac{p\,(\mathrm{i} \mid \text{Boson Sampling})}{q\,(\mathrm{i} \mid \text{null hypothesis})}$
  - Assuming a uniform prior, Bayes' rule says Boson Sampling is the more likely hypothesis if $r_i > 1$
- Counting variable *D* tracks number of events with $r_i > 1$

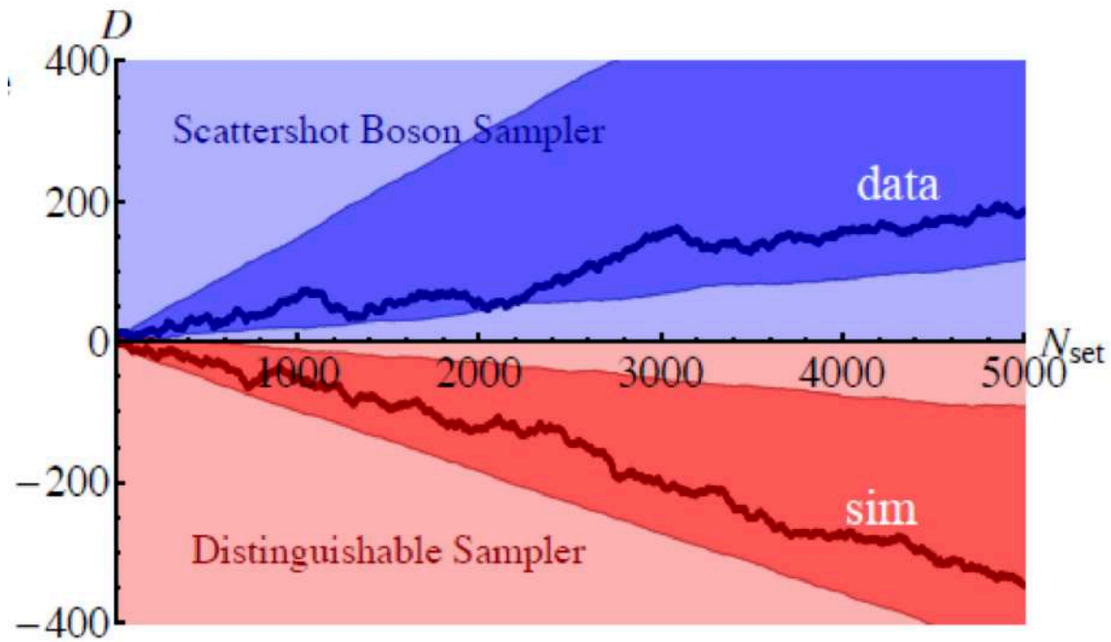

13-mode interferometer data

KLM scheme for linear-optical QC

- KLM scheme combines two further ideas:

- CZ gate teleportation
- near-deterministic optical teleportation

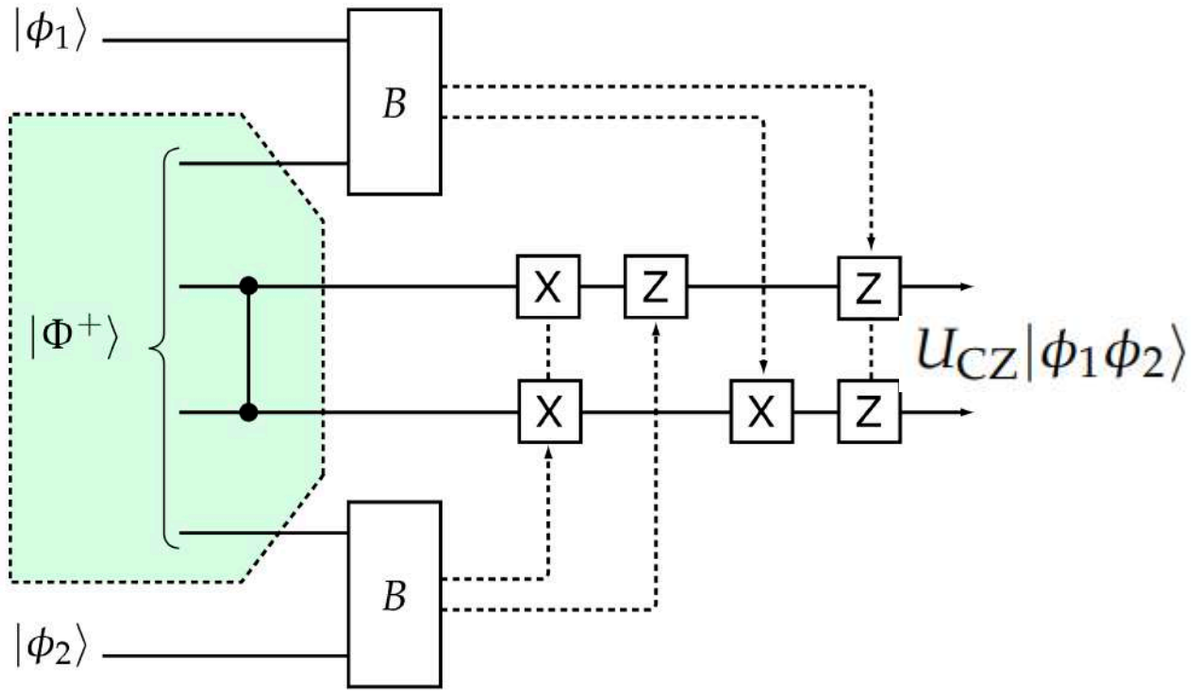

from: Kok et al., Rev. Mod. Phys. 79, 135 (2005)

Gate-teleport CZ to auxiliary (off-line) qubits instead.

Problem: in linear optics, Bell measurements can't be done perfectly!

KLM solution: generalized Bell measurement on large ancillary state of *n* photons.

Success rate $$p = \frac{n^2}{(n+1)^2}$$

Can be below fault-tolerant threshold, but not practical…

- Note the **similarities with MBQC**: gate teleportation, measurements and adaptivity…
- More resource-efficient MBQC ideas involve probabilistic cluster-state growth, then adaptive measurement, as suggested by Browne and Rudolph, PRL 95, 010501 (2005).

Quantum computing with light – continuous variables

- Quadratures of EM field, squeezing and displacement operators, non-gaussian operations

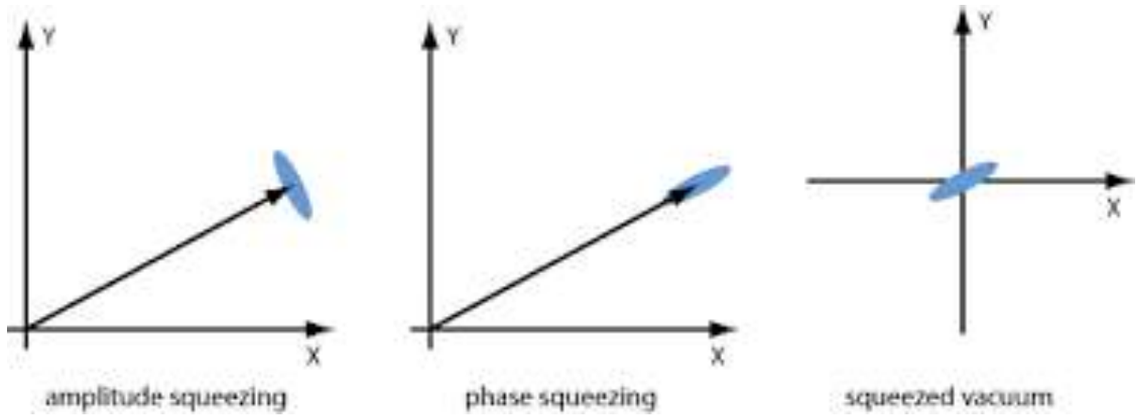

- Review: Braunstein/van Loock, Rev. Mod. Phys. 77, 513 (2005)
- More recent developments:

Hybrid DV/CV systems

- Continuous-variable entangled OPO beams
- integration with discrete wave-guide chip
- part of an experimental drive towards large-scale continuous-variable QC

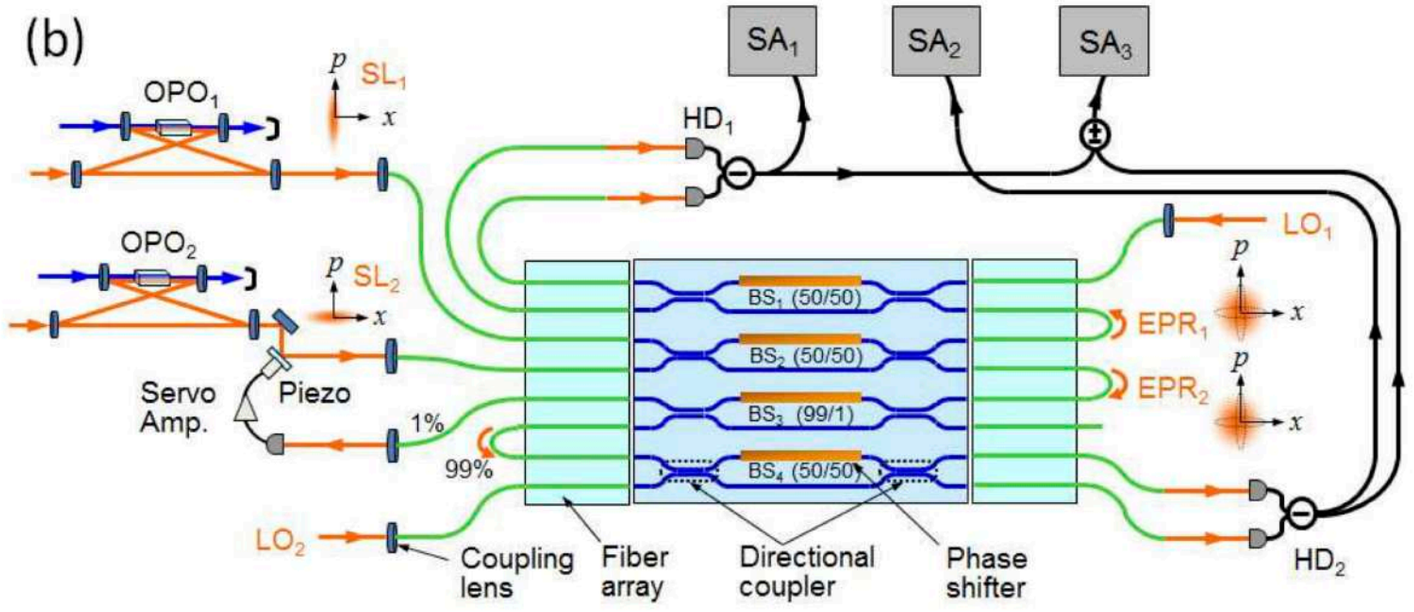

from: Masada *et al.*, Nat. Photon. 9, 316 (2015)

Quantum computing with light – continuous variables

- Quadratures of EM field, squeezing and displacement operators, non-gaussian operations

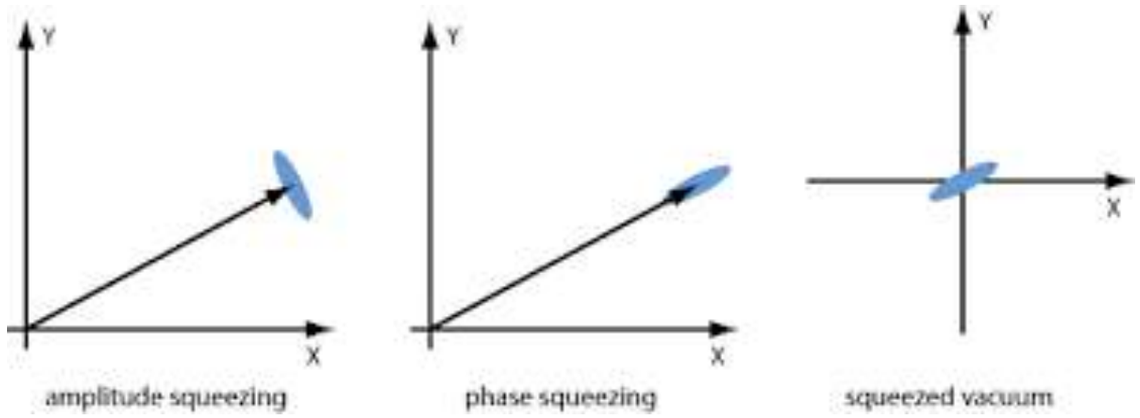

- Review: Braunstein/van Loock, Rev. Mod. Phys. 77, 513 (2005)
- More recent developments:

Hybrid DV/CV systems

- Continuous-variable entangled OPO beams
- integration with discrete wave-guide chip
- part of an experimental drive towards large-scale continuous-variable QC

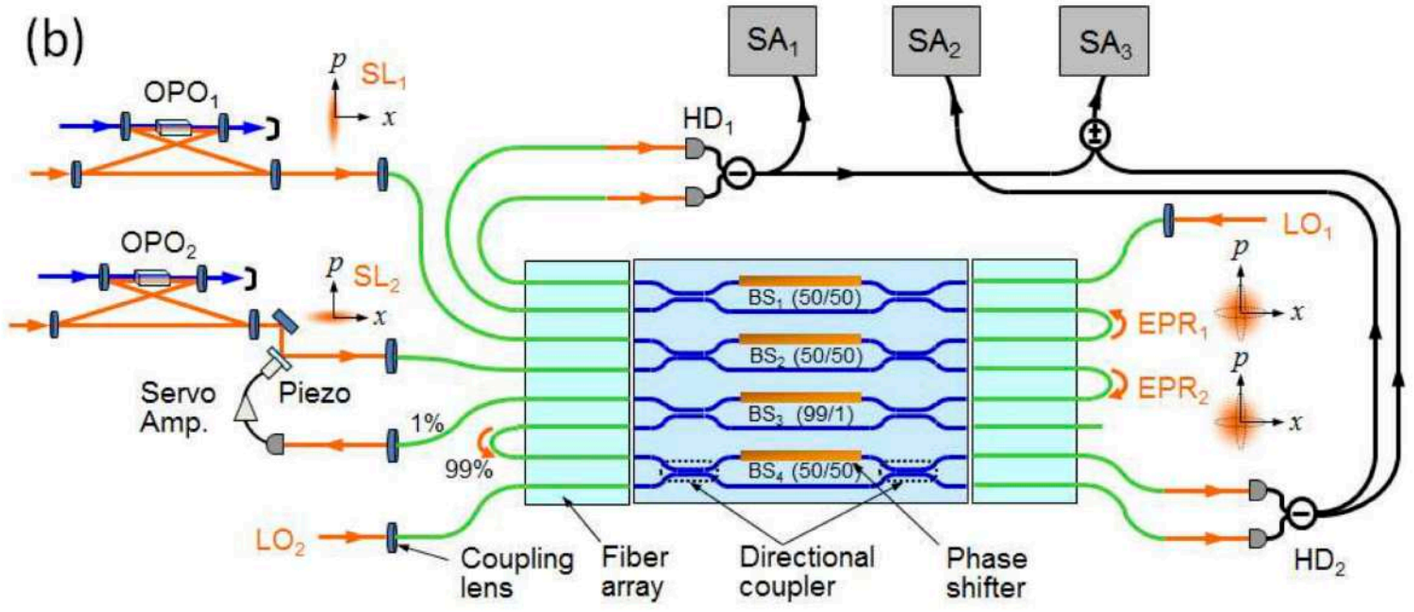

from: Masada *et al.*, Nat. Photon. 9, 316 (2015)

Quantum computing with light – continuous variables

Optical frequency combs

- Optical parametric oscillator (OPO)
  = non-linear crystal in cavity
- creates entangled modes of light with different frequencies
- Olivier Pfister group: quadripartite CV cluster states (2011), entanglement between 60 modes (2014)

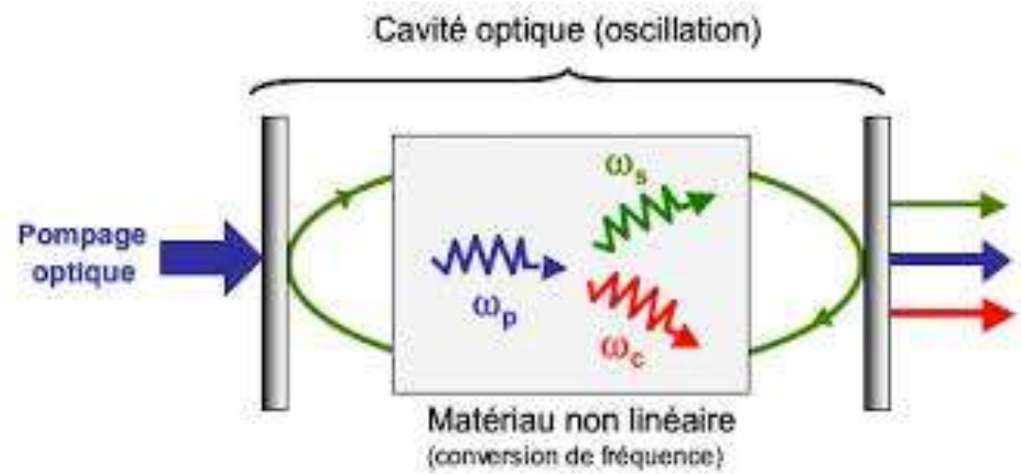

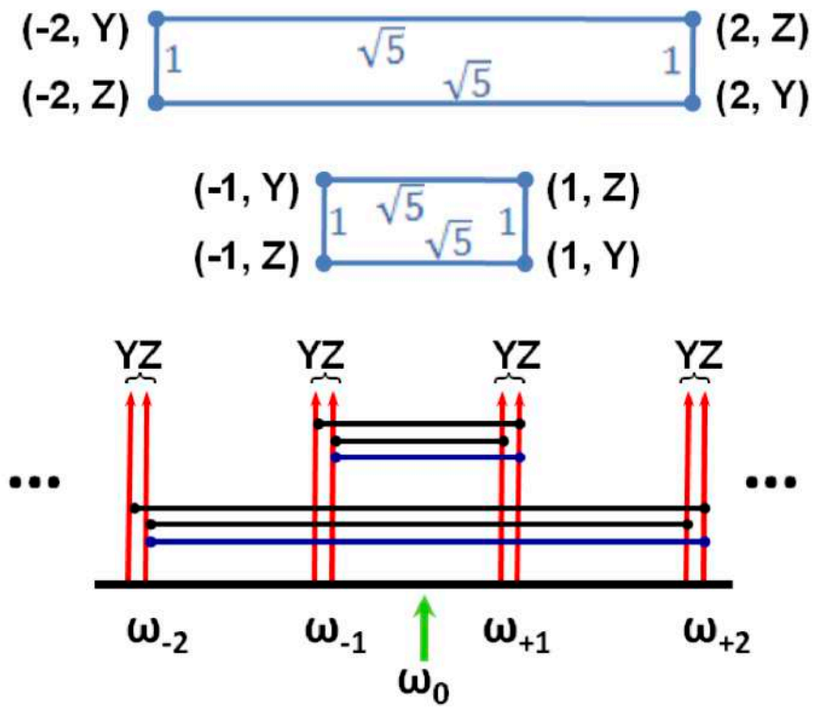

from: Pysher et al., PRL 107, 030505 (2011)

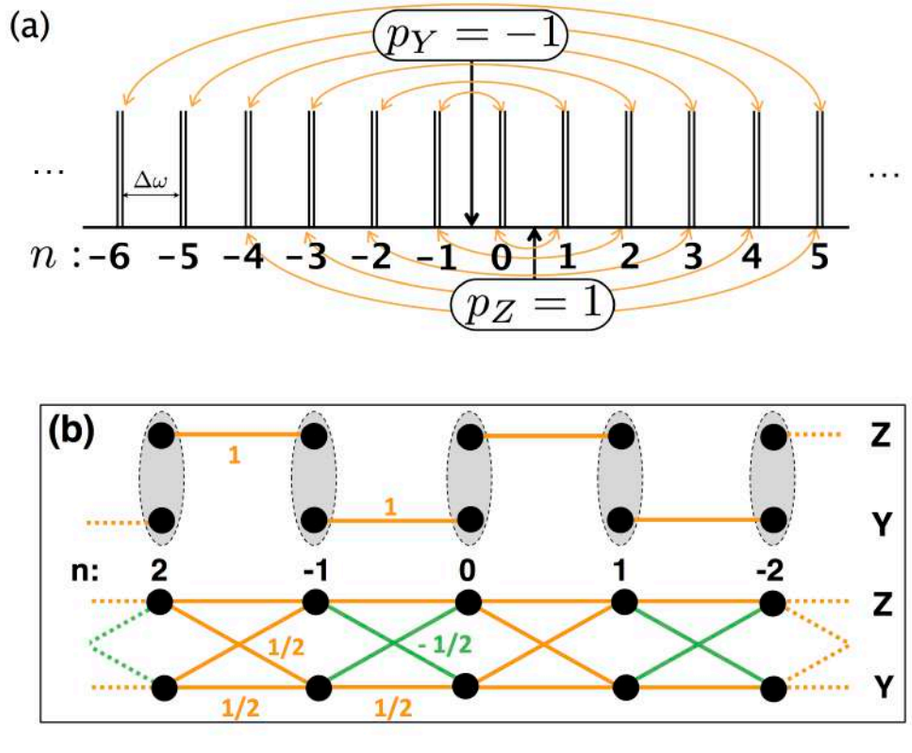

from: Chen, Menicucci, Pfister, PRL 112, 120505 (2014)

Quantum computing with light – continuous variables

OPO + time-domain multiplexing

- sequential production of EPR pairs in CV
- time-delay and BS creates CV graph state of up to 10000 modes
- Entanglement has been characterized for this graph size

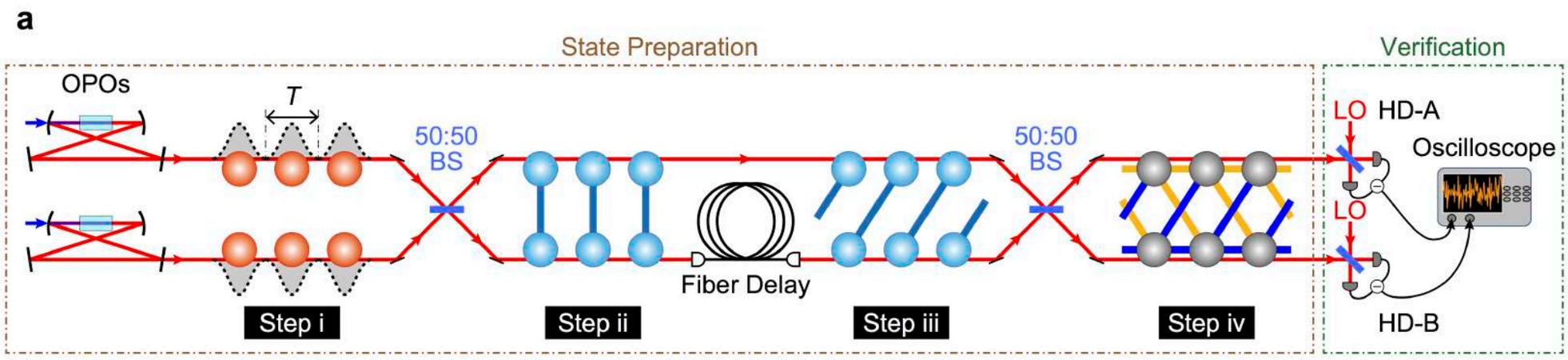

from: Yokoyama *et al.*, *Nat. Photon.* 7, 982 (2013)

Universal QC with measurement-based quantum computation

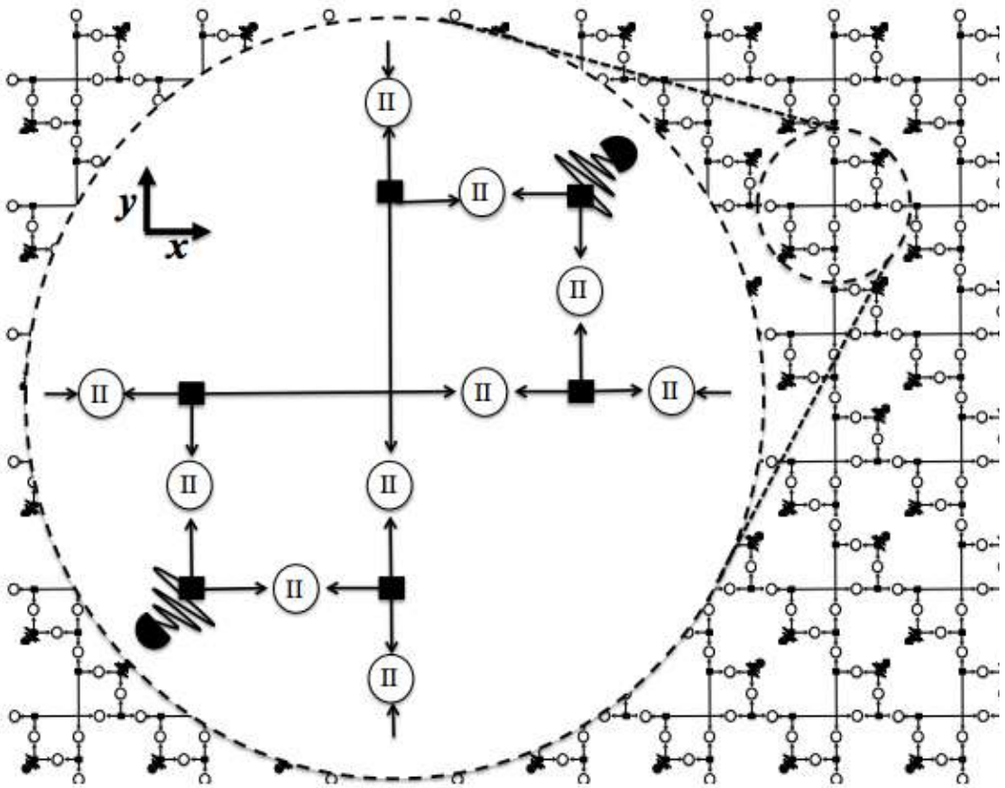

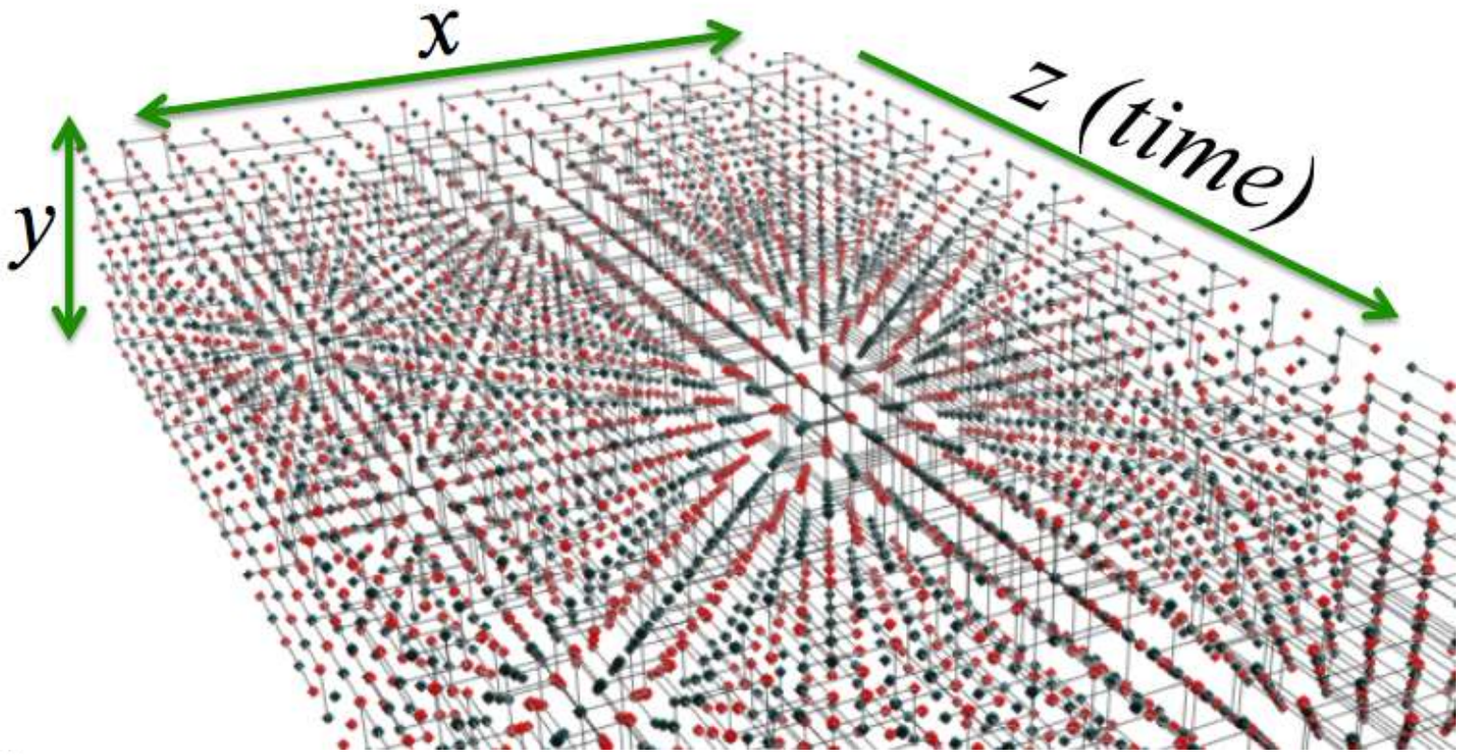

- MBQC using 3-photon GHZ-state sources on-chip: [Rudolph, arXiv:160708535]
  - (2+1)-dimensional architecture
  - probabilistic entangling gates sufficient, if above percolation threshold (essential use of error correction)
  - adaptive single-qubit measurements (delay lines)

- Key advantages: room-temperature chips (small cryo units for e.g. detectors), compatible with major chip foundry techniques, i.e. potentially scalable. Approach of US company PsiQuantum

Example: amplitude calculation via Feynman path sums

Consider the 3-mode interferometer shown in Fig. a), composed by two balanced beam-splitters connected in the way indicated. We are interested in evaluating the probability amplitude associated with the Fock state inputs and outputs indicated in the picture. Recall that the unitary describing a single balanced BS is given by:

$$U_{BS} = \frac{1}{\sqrt{2}} \begin{pmatrix} 1 & i \\ i & 1 \end{pmatrix} \tag{1}$$

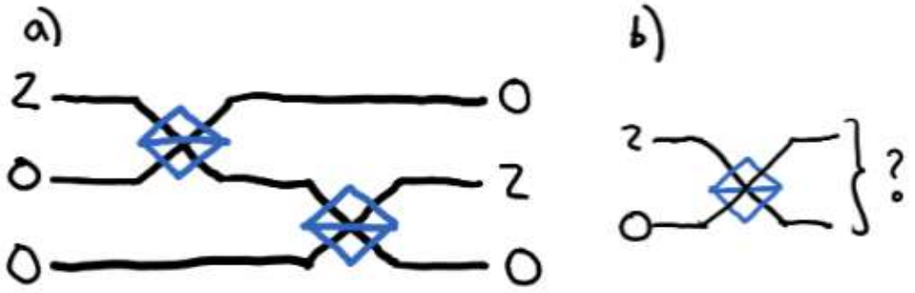

Figure 1: a) 3-mode inteferometer, and input/output occupation numbers. b) Balanced beam-splitter, and input occupation numbers.

a) Calculate the output state obtained when we input photon numbers $(2, 0)$ to a balanced BS, as in Fig. b).

b) Calculate the amplitude and probability associated with the input and output states shown for the 3-mode device.

Tips: For b) you can use the permanent formula; propagate creation operators; or propagate the wave-function. The simplest way, though, is to use the idea of Feynman path sums, and the result of item a) above.

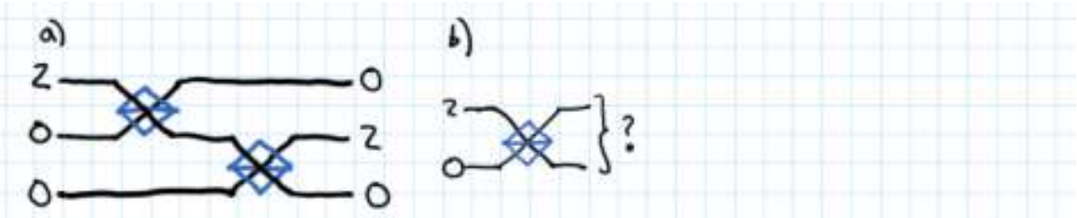

a) $(a_1^+)^2 |00\rangle = \sqrt{2}|20\rangle$

$a_1^+ \to \frac{1}{\sqrt{2}}(a_1^+ + i a_2^+) \Rightarrow (a_1^+)^2 \to \frac{1}{2}(a_1^+ + i a_2^+)^2$

$= \frac{1}{2}(a_1^{+2} + 2i\, a_1^+ a_2^+ - a_2^{+2})$

Initially: $|20\rangle = \frac{1}{\sqrt{2}}(a_1^+)^2 |00\rangle$

After BS: $|20\rangle \to \frac{1}{\sqrt{2}}\left[\frac{1}{2}(a_1^{+2} + 2i a_1^+ a_2^+ - a_2^{+2})\right]|00\rangle = \frac{1}{2\sqrt{2}}\left[\sqrt{2}|20\rangle + 2i|11\rangle - \sqrt{2}|02\rangle\right]|00\rangle$

$= \frac{1}{2}|20\rangle + \frac{i}{\sqrt{2}}|11\rangle - \frac{1}{2}|02\rangle$

b) By photon number conservation, the waveguide connecting the 2 BSs must have 2 photons. The Feynman path thus only has 1 term:

$a_{TOT} = a\left(\begin{smallmatrix} 2 & - & 0 \\ 0 & - & 2 \end{smallmatrix}\right) \cdot a\left(\begin{smallmatrix} 2 & - & 2 \\ 0 & - & 0 \end{smallmatrix}\right)$

$-\frac{1}{2}$ $\qquad$ $\frac{1}{2}$ ← directly from a) above.

$\Rightarrow a_{TOT} = -\frac{1}{4}$

$\Rightarrow$ Probability $= |a|^2_{TOT} = \frac{1}{16}$ //

Alternatively, we can propagate the changes in the creation operators after first & second BS; or actually update the state-vector after the 2nd BS.